FEDERAL FACILITY DIAGNOSTIC X-RAY SURVEY PROCEDURE MANUAL
INDIAN HEALTH SERVICE
DIVISION OF ENVIRONMENTAL HEALTH

==========

IHS RADIATION PROTECTION PROGRAM
DIAGNOSTIC RADIOLOGICAL EQUIPMENT
SURVEY GUIDELINES

==========

MARCH 2002
++++

FEDERAL FACILITY DIAGNOSTIC X-RAY SURVEY PROCEDURE MANUAL
TABLE OF CONTENTS

SECTION I – GENERAL INFORMATION 1
INTRODUCTION 1
1. PURPOSE 1
2. OBJECTIVES 2
3. AUTHORITY AND RESPONSIBILITY 2
4. PROCEDURES 4
A. Introduction 4
B. Survey Parameters 4
C. Equipment Used 5
5. REPORT FORMAT 6
A. Comprehensive Survey Report 6
B. Interim Survey Report 8
6. REPORT DISTRIBUTION 8
SECTION II – DIAGNOSTIC SURVEY PROCEDURES 10
GENERAL PURPOSE RADIOGRAPHIC SYSTEMS 10
1. INTRODUCTION 10
2. SPECIFIC GUIDANCE 10
3. PRETEST-CHECKLIST 10
4. GENERAL INSTRUCTIONS 11
A. General Information 12
B. Illuminance 13
C. Initial Set-Up 13
D. Reproducibility 15
E. mA Linearity 15
F. Radiation Output Linearity 15
G. Timer Linearity 16
H. Beam Quality 16
I. kV Accuracy 17
J. SID Determination 17
K. kV Compensation 18
L. Acutal Versus Indicated Field Size 18
M. X-Ray Field/Light Field Alignment 19
N. X-Ray Field/UTIR Centers Comparison 19
O. PBL Operation 19
P. PBL Sizing 20
Q. Comments and Observations 22
5. CALCULATION PROCEDURES 22
B. Illuminance 22
D. Reproducibility 22
E. mA Linearity 23
F. Radiation Output Linearity 24

G. Timer Linearity 24
H. Beam Quality 24
I. kV Accuracy 26
J. kV Compensation 26
K. SID Determination 26
L. Actual Versus Indicated Field Size 26
M. X-Ray Field/Light Field Alignment 27
N. X-Ray Field/UTIR Centers Comparison 27
P. PBL Sizing 27
MOBILE RADIOGRAPHIC SYSTEMS 29
1. INTRODUCTION 29
2. SPECIFIC GUIDANCE 29
3. PRETEST CHECKLIST: 29
4. GENERAL INSTRUCTIONS: 30
A. General Information 31
B. Initial Set-Up 31
C. Reproducibility 32
D. mA Linearity 33
E. Radiation Output Linearity 33
F. Timer Linearity 33
G. Beam Quality 34
H. kV Accuracy 35
I. kV Compensation 35
J. Illuminance 36
K. X-Ray Field/Light Field Alignment 36
L. Minimum Source to Skin Distance: 37
M. Standby Radiation: 37
N. Comments and Observations: 37
5. CALCULATION PROCEDURES 37
C. Reproducibility 37
D. mA Linearity 38
E. Radiation Output Linearity 39
F. Timer Linearity 39
G. Beam Quality 40
H. kV Accuracy 41
I. kV Compensation 41
J. Illuminance 41
K. X-Ray Field/Light Field Alignment 41
M. Stand-By Radiation 42
DENTAL RADIOGRAPHIC SYSTEM 43
1. INTRODUCTION: 43
2. SPECIFIC GUIDANCE: 43
3. PRETEST CHECKLIST: 43
4. GENERAL INSTRUCTIONS: 44

A. General Information 44
B. Initial Set-Up 46
C. Exposure at Cone Tip - Reproducibility 46
D. mA Linearity: 47
E. Timer Linearity: 47
F. mAs Linearity: 49
G. Beam Quality: 49
H. X-Ray Field Size and Shape/Minimum SSD: 50
I. kV Accuracy: 51
J. Recommended Exposure Factors and Exposure Data: 51
K. Comments and Observations: 52
L. Dental Phantom Information: 52
5. CALCULATION PROCEDURES 54
C. Reproducibility 54
D. mA Linearity 55
E. Timer Linearity 56
F. mAs Linearity 56
G. Beam Quality 56
H. X-Ray Field Size and Shape/Minimum SSD 57
I. kV Accuracy 57
J. Recommended Exposure Factors 58
TECHNIQUE/EXPOSURE EVALUATION (ESE) 59
1. INTRODUCTION 59
2. GENERAL INSTRUCTIONS 59
A. Projection Data 59
B. Set-Up and Exposure Measurements 61
C. Film Processing Data 63
3. CALCULATION PROCEDURES 63
UNDERTABLE X-RAY SOURCE FLUOROSCOPIC AND SPOT-FILM SYSTEMS 65
(Test Procedure UFA - Form FD2786) 65
1.0 General Guidance 65
2.0 Pretest Checklist 65
3.0 Interlock Test 66
4.0 Surveyor Protection Test 68
5.0 Tracking Test 69
6.0 X-Ray Field/Image Receptor Alignment 69
7.0 Entrance Exposure Rating - Automatic 72
8.0 Entrance Exposure Rate - Manual 74
9.0 Primary Barrier Transmission 75
10.0 Source-Skin Distance Determination 76
11.0 Beam Quality 77
12.0 Spot Film-Reproducibility 79
13.0 Spot Film X-Ray Field/Image Receptor Size Comparison 81
14.0 CALCULATION TECHNIQUES 82

(Test Procedure UFA - Form FD2786) 82
A. Minimum Source to Skin Distance 82
B. Fluoroscopic X-ray Field/Image Receptor Alignment 82
C. Fluoroscopic Entrance Exposure Rate 83
D. Primary Barrier Transmission 84
E. Beam Quality 85
F. Reproducibility 85
G. X-Ray Field/Spot Film Size Comparison 86
15.0 RESULTS RECORD 88
(Test Procedure UFA - Form FD2786) 88
A. Minimum Source to Skin Distance 88
B. Fluoroscopic X-ray Field/Image Receptor Alignment 88
C. Fluoroscopic Entrance Exposure Rate 89
D. Primary Barrier Transmission 89
E. Beam Quality 90
F. Reproducibility 90
G. X-Ray Field/Spot Film Size Comparison 90
DARKROOM FOG ASSESSMENTS 92
Standard Fog Test Protocol 92
Evaluating the Film 92
Dental Fog Test Protocol 94
Darkroom Fog Measurement 94
Daylight Systems Fog Measurement 95
Fog Evaluation (Darkroom) 96
Fog Evaluation (Daylight Systems) 96
Measurement Using Facilities Cephalometric or Panographic Film 96
PEAK KILOVOLTAGE DETERMINATION 98
1.0 GENERAL GUIDANCE 98
2.0 TEST SETUP 99
3.0 COPPER TRANSMISSION DATA 99
4.0 CALCULATION PROCEDURES 101
5.0 RESULTS RECORD 103
SECTION III – IHS CERTFICATION PROGRAM 106
A. Introduction 106
B. Certification Process 106
C. Levels of Certifications 107
CRPS – I - Dental Systems Certification 107
CRPS – II – General Purpose Systems Certification 107
CRPS – III. - Advanced Systems Certification 107
D. Re-Certification 108
CRPS – I - Dental Systems Re-certification 108
CRPS – II – General Purpose Systems Re-certification 108
CRPS – III. - Advanced Systems Re-certification 108
E. Continuing Education and Experience Documentation 108

F. Conflicts of Interest 109
GLOSSARY OF TERMS 110
APPENDICES 112

Appendix I ..... General Purpose Radiographic System Survey Form
Appendix II ..... Mobile Radiographic System Survey Form
Appendix III ..... Dental Radiographic System Survey Form
Appendix IV ..... ESE Survey Form
Appendix V ..... Under Table Fluoroscopy Survey Form
Appendix VI ..... Example Diagnostic X-Ray Survey Report
Appendix VII ..... Presidential Directive-Radiation Protection Guidance 1978
Appendix VIII ..... Consumer-Patient Radiation Health and Safety Act of 1981
Appendix IX ..... Chapter 21 ¦ Draft Use Document
Appendix X ..... Reference Documents

a. ..... Collimator Test Tool & Beam Alignment Test Tool
b. ..... Mammographic Screen-Film Contact Test Tool
c. ..... Mammography Focal Spot Test Stand
d. ..... Mammography Phantom Image Scoring
e. ..... Example Radiology Orientation Form
f. ..... Grid Alignment Test Tool
g. ..... Dental X-Ray Test Tool

Note: For General Survey Information, Administrative Policy Information, Processing Evaluation, CDRH Code Lists, etc., use the latest information from the **CDRH RADIOLOGICAL SURVEY PROCEDURES: USE CONTROL** manual.

SECTION I – GENERAL INFORMATION

INTRODUCTION

1. PURPOSE

The following manual has been prepared to provide the surveyor with presently recognized standards in the field of diagnostic X-ray radiation safety evaluation. Additionally, the manual is intended to provide a uniform methodology for survey and reporting procedures. This will ensure that appropriate parameters are evaluated, provide means of comparison, and allow objective program evaluation.

The public health significance of radiation protection is reflected in the attainment of maximum clinical benefit from the use of ionizing radiation while eliminating, wherever possible, unnecessary exposure to radiation.

The development and execution of guidelines for radiation protection are based upon an underlying philosophy in which two factors are of prime importance. First is the assumption that radiation effects follow a linear, or non-threshold dose-response relationship. There is convincing evidence, particularly insofar as the genetic effects of radiation are concerned, that there exists a non-threshold phenomenon; and although positive proof is thus far lacking, it has been deemed prudent to adopt this more conservative hypothesis in setting protection standards for large numbers of people. According to the non-threshold concept, there is no radiation dose so small that it does not involve some degree of risk. The non-threshold relationship, therefore, implies that there is no radiation protection standard, no matter how low, which can insure absolute safety to every individual in a population. However, since the magnitude of risk is proportional to the dose received, adverse effects would become manifest at very low dose levels only if extremely large numbers of exposed individuals were observed.

The second major factor to consider is that radiation confers great benefit upon both society and the individual along with its risk to health. Consideration of the extent of these benefits makes a certain degree of risk acceptable. Thus, a balance must be achieved in each contemplated radiation usage, in which benefit to be gained is weighed against the anticipated risk. If the benefit outweighs the risk, the radiation is utilized so that its maximum benefit will be realized while human exposure will be maintained at the minimum level consistent with deriving these benefits.

2. OBJECTIVES

Radiation protection programs are concerned with three groups of people: 1.) patients, 2.) medical, dental and allied health personnel, and 3.) visitors and non-occupationally exposed persons.

1. Radiation dose received by patients must be minimized consistent with maximum clinical requirements. Examples of reducing radiation dose to patients includes the elimination of procedures which are unnecessary, or are of marginal value, and methods to reduce dose per exposure (i.e., x-ray machine operating in compliance with the Radiation Control for Health and Safety Act of 1968; Quality Assurance programs; Gonadal shielding, etc.).

2. Radiation dose received by dental and allied health personnel must be minimized. Fundamental methods include the provision of protective barriers, protective clothing, and the implementation of appropriate operational procedures. Some reduction is also achieved by reducing dose to patients.

3. Radiation dose received by non-occupationally exposed persons must be minimized or eliminated. The provision of shielding is the principle method of radiation protection for these persons.

3. AUTHORITY AND RESPONSIBILITY

The sources of authority and responsibility for radiation control programs include, but are not limited to, the following:

1. The Radiation Control for Health and Safety Act of 1968. This act was enacted by the Congress to protect the public from the dangers of unnecessary exposure to radiation from electronic products, including diagnostic x-ray equipment. Radiation safety performance standards for diagnostic x-ray systems and their major components have been issued under this Act, as have regulations which impose certain responsibilities on assemblers, distributors, and dealers of such equipment. Regulations for the administration and enforcement of the Act were last revised in April, 1988, by the Department of Health and Human Services.

2. The Federal Diagnostic X-Ray Equipment Performance Standard, Code of Federal Regulations, Title 21, Sections 1020.30 - 1020.32. These standards were issued as a final order in the Federal Register on August 15, 1972, as part of the above mentioned Act of 1968. It prescribes performance criteria for specified components of diagnostic x-ray systems and requires that these components be certified by the manufacturer as being in compliance with the criteria.

3. Presidential Directive, "Radiation Protection Guidance To Federal Agencies for Diagnostic X-Rays", issued on February 1, 1978. The intent of the Directive was

to reduce radiation exposure by eliminating unnecessary x-ray examinations, by assuring the needed examinations are performed using appropriate techniques and properly functioning equipment, and by assuring that the health care staff are properly trained.

4. Public Law 97-35. Subtitle I - Consumer/Patient Radiation Health and Safety Act of 1981. This law provides for education certification of persons utilizing x-ray equipment and improving medical and dental x-ray procedures consistent with safety precautions and standards.

5. The IHS Personnel Monitoring Program Instruction Manual. The manual describes the responsibilities and procedures for the administration of the program in IHS facilities.

6. The National Council on Radiation Protection (NCRP) Reports (Report Numbers 35, 49, 59, 99, 102, 105 and 116)

7. The Joint Commission on Accreditation of Healthcare Organizations (JCAHO), Accreditation Manual for Hospitals and The Accreditation Manual for Ambulatory Care Facilities.

8. Centers for Medicare and Medicaid Services (CMS), Hospital Accreditation Manual.

9. The National Center for Devices and Radiological Health (CDRH). Radiological Survey Procedures Equipment Performance Manual; The Radiation Use Control Procedures Manual; and Sensitometric Technique for the Evaluation of Processing (STEP).

10. The Indian Health Service Policy Manual. Safety (Chapter 9), and Environmental Health (Chapter 11).

11. The Nuclear Regulatory Commission (NRC). Radiological Procedures Standards

12. The Indian Health Manual, Part 3, Professional Services, Chapter 21, "Medical Imaging Program".

13. Conference of Radiation Control Program Directors, Inc. (CRCPD), Average Patient Exposure Guides.

14. Suleiman, OH; Showalter, CK; Gross, RE; Bunge, RE. Radiographic Film Fog in the Darkroom. Radiology 151(1):237-238, 1988

15. Kodak Service Bulletin 101. Dryer Venting Requirements for all Kodak X-Omat Processors. Eastman Kodak Company, Health Imaging, Imaging Service Center. Rochester, NY. October 1992

16. Utilization of Diagnostic X-Ray Examinations. DHHS, USPHS, FDA, CDRH. Publication FDA 83-8203, 1983

17. Average Patient Exposure Guides, 1992. Publication 92-4. Committee on Quality Assurance in Diagnostic Radiology. Conference of Radiation Control Program Directors, Inc. and National Evaluation of X-Ray Trends (NEXT) 1994 P/A Chest X-Ray Data, CRCPD and CDHR, FDA, 1994

4. PROCEDURES

A. Introduction

The optimal radiation protection survey should include appropriate communication between all parties involved with the radiation protection program, evaluation of equipment parameters, assessment of operational procedures, measurement of patient skin entrance exposures for selected techniques, and the evaluation of other related factors.

Two types of diagnostic x-ray radiation protection surveys will be performed, comprehensive and interim. Comprehensive surveys will address all aspects of radiation protection with the exception of patient positioning and calibration (invasive adjustment of the equipment). The interim survey will identify any changes, and evaluate the facility's response to previous recommendations. The interim survey may or may not include evaluation of equipment performance.

The minimal frequency of radiation protection surveys depends upon the type of diagnostic imaging equipment. Medical radiology services should be surveyed annually. Dental x-ray services should be surveyed biennially, depending upon past history and available manpower. These surveys may be comprehensive or interim. X-ray machine survey procedures shall be performed whenever new equipment is installed or certifiable radiation producing components are replaced.

Prior to the survey, coordination with appropriate facility personnel, preferably in writing, is essential and should be accomplished. Significant findings should be discussed with appropriate personnel prior to leaving the facility and be followed with the formal report results.

B. Survey Parameters

Parameters evaluated during the survey depend upon the type of diagnostic imaging equipment. IHS radiological survey procedures shall be used to evaluate

equipment. These procedures should include: Beam quality, reproducibility, linearity, timer linearity, source-to-image distance, beam alignment, illumination, quality assurance, shielding, operator protection, gonadal shielding, patient restraints, patient skin entrance exposure, and other parameters as are appropriate.

Quality Assurance evaluation procedures shall include, but not be limited to, the following: the utilization of the FDA Use Control program procedures; the evaluation of departmental policy and procedures (including staff compliance); completion of a STEP test for each processor; the evaluation of cassette screen cleaning practices, film/screen contact testing, bulk film storage practices, retake analysis, and equipment maintenance/repair records; the provision of film processor control charts, technique control charts, tube rating charts, and warm-up technique charts; the provision of annual departmental evaluations and relevant inservice education; and general safety considerations.

C. Equipment Used

The following equipment (or equivalent) is suggested for conducting a comprehensive radiation protection survey:

1. MDH Model 1015 x-ray meter
   a. Model 10x5-6 cm^3 Ion Chamber
   b. Model 10x5-100 cm^2 Ion Chamber

2. CDRH Test Stand Kit

3. CDRH Chest Phantom (LucAl)

4. CDRH Abdomen/Spine Phantom

5. Collimator Test Tool (Optional)

6. kVp Meter - Mini-X digital or equivalent

7. Non-Mercury Thermometer - Metal stem or electronic

8. Film/Screen Contact Grid

9. Step Wedges

10. QA Monitoring Device for Dental Radiographic Systems

11. Sensitometer - X-rite portable (calibrated for STEP)

12. Densitometer - X-rite portable (calibrated for STEP)

13. Hand Cart (for transporting equipment)

14. Geiger/Mueller Meter

15. Digiphot Light meter or equivalent

16. Metric and English Tape Measure

17. Plastic Cassettes

18. Appropriate sizes and thicknesses of aluminum and copper for the HVL and/or kVp tests.

19. Calculator

20. Stopwatch

21. 18" Straight Edge

22. CDRH Fluoroscopy Phantom and imaging tool

23. CDRH Dental phantom

24. STEP film

5. REPORT FORMAT

A. Comprehensive Survey Report

A model survey report format is located in the Appendix of this manual. The typical comprehensive survey report should include the following:

a. A title cover page with the name of the facility, survey date, and name of the surveyor(s).

b. A table of contents.

c. An executive summary

This summary should alert the facility administrator to significant findings both good and bad that are worthy of special mention.

d. An introduction

The minimum components of the introduction should include the survey dates and persons contacted, a description of the purpose survey, a description of the approximate number of exposures per month, a description of the number and type of x-ray equipment available at the facility, and a description of any attachments in the Appendix.

Please Note: The surveyor's credentials should be described in the Appendix.

e. A list of parameters evaluated during the survey

The type of parameters to be evaluated include: Beam quality, reproducibility, linearity, timer linearity, source-to-image distance, beam alignment, illumination, quality assurance, shielding, operator protection, gonadal shielding, patient restraints, patient skin entrance exposure, and other parameters as are appropriate.

f. A description of findings and recommendations

The minimum components of the findings and recommendations section should include, data from the following patient entrance skin exposure measurements: P/A Chest, Lateral Skull, A/P Abdomen exams, A/P Lumbo-Sacral Spine, and P/A Wrist; a description of the strengths or achievements of the department being evaluated; and a description of any inappropriate conditions found during the survey with suggested recommendations for corrective action. Efforts should be made to describe the magnitude of the finding, e.g., if a problem poses an unnecessary radiation exposure hazard, this finding should be identified as serious, requiring immediate attention. If on the otherhand, a condition poses little or no hazard to patients, visitors or employees, correction may be delayed until the next preventative maintenance cycle.

Please Note: Recommendations must fully describe the proposed correction and be written in terms that the lay reader can understand.

g. A conclusion

The conclusion should list any item in need of immediate action and other conditions which present a public health hazard. These conditions should be assigned a priority for corrective action, and a time table for corrections identified.

h. A signature page signed and dated by the writer and any other appropriate officials.

i. An appendix

The appendix should include the x-ray calculations, quality assurance forms, glossary of terms, and any other information needed to add clarity to the report; e.g., barrier design information, etc.

B. Interim Survey Report

The interim survey report shall be a formal written document. An official memorandum will be acceptable. The interim survey report will include the following:

a. An introduction

The introduction should include the names of the person contacted, the date of the survey, and the purpose of the evaluation.

The report may include a review of previous survey recommendations, verification of the implementation of quality assurance programs, documentation of additional improvement, and the determination of any new conditions. The survey may or may not require a complete machine performance evaluation.

b. A description of findings and recommendations

This portion of the report should be comparable to items addressed in the similar section of the comprehensive radiation protection survey report; e.g., listing of the strengths of the department and areas of needed improvement.

c. A conclusion

The conclusion should discuss the major items of public health significance. The writer should suggest possible solutions and alternatives; e.g., additional training, conversion to a different system, etc.

6. REPORT DISTRIBUTION

The comprehensive and interim radiation protection survey reports shall be distributed in accordance with established Indian Health Service guidelines. A suggested minimal listing for distribution includes:

1. Service Unit Director (original)
2. IHS Headquarters - Principle Sanitarian, DCEH
3. Area - Director or Quality Assurance Coordinator
4. Area - Radiological Services Coordinator
5. Area - Construction and Maintenance Branch, or Biomedical Services Branch
6. Area - Chief, Dental Services
7. Project Officer (638 Hospital/Clinic Program)
8. Supervisor of Radiological Service, or Radiological Technician in charge of the facility surveyed
9. Service Unit Chief of Dental Services
10. Service Unit Sanitarian
11. Copy to surveyors' files

SECTION II – DIAGNOSTIC SURVEY PROCEDURES

GENERAL PURPOSE RADIOGRAPHIC SYSTEMS

USE and PERFORMANCE EVALUATION

Surveyor's Instructions

1. INTRODUCTION

The General Purpose Radiographic Systems Use and Performance Evaluation form is intended to provide data that will give a comprehensive evaluation of the use and performance of a radiographic system. If collected properly, the data will be compatible with CDRH compliance program data.

2. SPECIFIC GUIDANCE

On equipment with line voltage compensators be sure the indicator is in the proper region before performing any testing that depends on electrical power (e.g., exposure output, light illumination, etc.).

Caution: Consult the system's duty cycle information and anode cooling curves to ensure that the following series of exposures will not exceed the manufacturer's anode heat loading specifications. If the proper cooling time between exposures cannot be determined, use the following guidance:

a. Rotating anode tubes: Wait 60 seconds after every accumulated 5,000 heat units (mAs x kVp).

b. Stationary anode tubes: Wait 30 seconds between exposures of less than 900 heat units, and 60 seconds between exposures of 900 to 1,800 heat units.

3. PRETEST-CHECKLIST

Turn on the main power to the x-ray system.

Connect the 6-cm^3 ionization chamber to the electrometer. Set the mode selector switch to EXPOSURE RATE and the function selector to MEASURE. Allow the electronics 10 seconds to stabilize. After 10 seconds, the exposure rate should be less than 4 mR/min. If it is not, the instrument may be defective, and you should contact the CDRH for guidance. Set the Pulse -

Fraction Threshold on the MDH instrument to 0.5. Turn the selector switch to PULSE/EXPOSURE prior to making measurements.

Important: Verify that the X-ray tube has been properly warmed prior to making any exposures. If not, request the X-ray equipment operator to perform the approved warm-up procedure.

4. GENERAL INSTRUCTIONS

Facility Name:

Enter the name of the facility as it appears on the IHS/DEH Facility Data System listing or other agency facility listing system.

Person Contacted:

Enter the name of the person contacted at the facility during the survey, e.g., radiological technician, radiologist, etc.

Survey Date:

Enter in the date that this form is filled out at the facility. Use a MM-DD-YY format as indicated. For example, June 9, 1990 would be recorded as 06-09-90.

Surveyor ID:

IHS employees enter in their 3 digit EHRS identification number. Other users enter in their initials or other ID of the surveyor who completed this survey form.

Manufacturer, Date of Manufacture, Model & Serial Numbers:

Enter in the appropriate information from the control panel label of the x-ray unit.

Note: If any item on this survey form is not applicable, or is being skipped, draw a line through the data boxes for that item to indicate to the reviewers that it has been considered, not missed.

As used in this protocol the term **INDICATED** means a value observed by the surveyor from a meter or dial that is a part of the system being surveyed; **MEASURED** means a value that is obtained from a physical measurement by the surveyor.

A. General Information

A.1a Enter in the unique IHS Facility Data System (FDS) number for this particular unit at Item 1a. Other agencies enter in some unique identifier such as an agency inventory control number. The computer program uses this field to SEARCH through the data base.

A.1b Enter in the System ID number (CDRH #) at Item 1.b. This number is optional for IHS facilities.

A.2 Enter in the room number or usual location of the radiographic system at Item 2.

A.3 Indicate if the operator of this system is REQUIRED to stand in a shielded area while making an exposure by entering Y or N at Item 3. If the operator, by extending the exposure cord, can stand outside of the shielded area and make an exposure, code as N.

A.4 Indicate if the radiation warning label is on the control console of the x-ray unit by entering Y or N at Item 4.

A.5 Indicate whether the exposure settings (or technique factors) are visible to the operator before an exposure is taken by entering Y or N at Item 5.

A.6 Indicate if there is a visible indication of the tube selected at the control console and at the tubehead when multiple tubes are controlled by a single exposure switch by entering a Y or N at Item 6. Enter an X if the exposure switch only controls a single tube.

A.7 Indicate if means are available to show when the beam is perpendicular to the plane of the image receptor by entering Y or N at Item 7.

A.8 Enter Y or N or X (not present) at Items 8a - 8d to indicate if each gantry lock functions properly.

A.9 Enter Y or N or X (not present) at Item 9 to indicate if the centering detent is working properly.

A.10 Enter Y or N at Item 10 to indicate if the electrical cables appear to be in good condition.

A.11 Enter Y or N at Item 11 to indicate if the equipment appears to be mechanically stable.

A.12a Enter Y at Item 12a to indicate if up-to-date radiographic charts are in use in this room. Enter N if no charts are in use.

A.12b Enter Y or N at Item 12b to indicate if back-up technique charts are available for manual mode use of phototimed equipment. Enter an X if the x-ray unit is not phototimed.

A.13 Enter Y or N at Item 13 to indicate if tube rating and cooling charts are posted for this x-ray unit.

A.14 Enter Y or N at Item 14 to indicate if a heat unit indicator is installed for this unit. Enter an X if the indicator is not required.

A.15 Enter Y or N at Item 15 to indicate if routine Quality Control tests are performed on this unit.

A.16 Enter **B**(oth) at Item 16 to indicate if a QA and a Maintenance Logbook exists for this unit. Enter **N**(o) if either book is not maintained.

B. Illuminance

SET-UP: Adjust the tube housing so that the distance from the x-ray source to the sensing element of the light meter is 100 centimeters. Adjust the collimators to a 10” x 10” field size. Measure the light from the center of each quadrant.

1	2
3	4

B.1 Record the measured total illuminance from each quadrant as indicated in the SET-UP figure at Items 1-4 (TOTAL). Record the ambient illuminance from each quadrant when the collimator light is off at Items 1-4 (AMBIENT). Subtract these two values and enter in the net illuminance for each quadrant in the boxes at Items 1-4.

C. Initial Set-Up

Note: Measurements will be taken and recorded later in the procedure after the test stand can be moved without affecting the accuracy of the procedure.

Note: If both "Manual" and "Automatic" controls are provided for exposure termination, select the "Manual" mode of operation.

C.1 If available, use the centering device to center the X-ray table top. Place the test stand in the center of the table, and position the diagnostic source assembly over the test stand with the x-ray beam axis aimed vertically downward so that it is centered over the test stand. Orient the stand so the long axis of the base is parallel to the long axis of the table.

C.2 Remove any extra filtration from the tube housing assembly. This may be accomplished by removing any aluminum from the slot in the tube housing assembly or dialing the filtration to the minimum setting, depending upon the type of machine present. **Under no circumstances should the surveyor disassemble the tube housing assembly to remove filtration.**

C.3 Adjust the tube housing assembly to a commonly used Source to Image receptor Distance (SID), using the gantry distance indicator as a reference. A SID of 101.6 cm or 40 inches is recommended.

C.4 Make sure the light field is not shielded by the stand. Make sure that space is available between the stand and the x-ray tube/collimator assembly for ease in inserting the aluminum filters for the HVL tests.

C.5 Place the slide assembly, **grid side facing up**, in slot #6 of the test stand. Load an 8" x 10" film in a cardboard cassette and place it in the slide assembly.

C.6 Collimate the light field size to approximately 4" x 6" at the slide assembly grid. Place metal markers at all four of the <u>inside edges</u> of the visual field. Make sure the light field is not shielded by the stand.

C.7 Insert the ion chamber assembly through the lower chamber mounting hole in the test stand, ensure that it will be fully exposed by the radiation beam, and secure it with the retaining ring. Also ensure that the probe is centered in the radiation beam and recheck for proper alignment.

C.8 Place a loaded film cassette in the Bucky tray, and center the cassette and Bucky tray.

C.9 Enter the exposure settings (technique factors) selected for use in the reproducibility tests at Items 1-4. Select 90 kVp, if possible. If mA and time can be separately selected enter in those values and draw a line through the boxes for

mAs. If only mAs is selectable, enter that value and draw a line through the boxes for mA and time.

Note: If the unit allows a choice of either Large or Small focal spot, pick the LARGEST Focal Spot and the SMALLEST mAs typically used within the facility. A technique factor in the range of 10-20 mAs is recommended. This will minimize the heat loading on the tube during the survey.

D. Reproducibility

D.1 Make four exposures using the technique factors selected in Section C. Enter the exposure measurements at Items 1a-4a and corresponding time measurements at Items 1b-4b.

Note: Remove the films from the slide assembly and Bucky after the first exposure! Develop them and save them for measurements for Section M.

Note: Allow time for tube cooling between each exposure.

Note: Record the exposure measurements to the nearest whole number. DO NOT record decimal fractions.

Note: Change the exposure settings away from, and back to the selected values between each exposure.

D.2 If the first four exposure values do not appear to be reproducible (i.e., each measurement is not within 10% of the highest exposure reading), make six (6) additional exposures. Enter the exposure and time measurements as indicated at Items 5a-10b.

E. mA Linearity

E.1 Select a new mA station and enter its value at Item 1. Insure that the new mA is not more than twice, or less than half, of the original setting. Insure that the kVp remains constant. DO NOT change the timer setting.

E.2 Make four exposures and enter the exposure measurements at Items 2-5.

F. Radiation Output Linearity

F.1 Enter the kVp to be maintained for these tests at Item 1. Select 90 kVp, if possible.

F.2 (a) If separate mA and timer stations are available, maintain a constant time, and vary the mA station. Enter the indicated mA and time, the focal spot used (as either S=Small or L=Large), and the measured exposure at Items 2a-12a, 2b-12b, 2d-12d, and 2e-12e. Draw a line through the boxes for the mAs station (column c).

(b) If only mAs stations are available, enter the indicated mAs, the focal spot selected, and the measured exposure at Items 2c-12c, 2d-12d, and 2e-12e. Draw a line through the boxes for the mA and timer stations (columns a and b).

G. Timer Linearity

G.1 Select kVp and mA stations and enter in Items 1 and 2. (The settings used in the initial set-up are recommended.)

G.2 Vary the timer settings in a consistent manner, entering the indicated timer setting chosen and the measured exposure at Items 3a-8b.

H. Beam Quality

Note: The intent of this test is to determine the minimum amount of filtration that is inherent in the tube housing.

H.1 Maintain 90 kVp, if possible. Do **not** record the selected kVp at Item 1, the **actual** kVp value will be entered after testing in **Section I, KV ACCURACY**.

H.2 Use the same mA and time selected in the initial set-up, C.8. Make an exposure with NO additional aluminum filtration in the beam and enter the measured exposure at Item 2a.

H.3 Enter the measured exposure and the millimeters of aluminum utilized for each exposure at Items 3a,b - 6a,b.

Note: It is essential for the data processing programs that the beam quality determination be made using increasing amounts of aluminum, e.g. 1.5 mm Al, 2.5 mm Al, 3.5 mm Al, and 4.5 mm Al.

H.4 If the HVL has not been achieved with 4.5 mm Al, select an appropriate amount of aluminum so that the HVL will be exceeded in the next exposure. Enter the measured exposure and the mm Al used at Items 7a,b.

I. kV Accuracy

Set-Up: Remove the test stand and radiation probe. Following the manufacturer's recommendations, arrange the kV meter and the x-ray tube into the configuration necessary for the type of kV meter being utilized.

I.1 Set the x-ray unit for the highest kV normally utilized by the facility and enter this value at Item 1a.

I.2 Set the x-ray unit's timer at 100 milliseconds, or the shortest time recommended by the meter manufacturer, and utilize an mA setting high enough to allow the meter to operate. Make an exposure and enter the measured kilovoltage at Item 1b. If only mAs is selectable, utilize the smallest mAs setting possible that will allow the kV meter to operate.

I.3 Maintain the kV setting from Step I.1 and enter the value at Item 2a.

I.4 Make an exposure and enter the measured kV at Item 2b.

I.5 Select and enter two other kV stations commonly utilized by the facility at Items 3a and 4a. Select an adequate mAs to allow the kV meter to operate. Make an exposure at each setting and enter the measured kV at Items 3b and 4b respectively.

Note: One of the kV settings tested in this section must be the one used in **Section H, BEAM QUALITY**. In the event that the accuracy is off to a large extent, this should prevent an error message based on calculating HVL on the indicated kV rather than the actual value. After testing, enter the **MEASURED** kV value from the meter reading at **Item 1 of SECTION H, BEAM QUALITY**.

I.6 Different kV meters measure different aspects of the kV waveform. Enter the type of kV measurement performed (Average, Peak, Effective) at Item 5.

J. SID Determination

Note: Before removing the test stand or moving the tube head, record the following measurements.

J.1 Record the indicated Source to Image receptor Distance (SID) from the gantry distance indicator at Item 1a or 1b, depending upon the units.

Caution: Some tables are concave along the center. Special compensation must be made for the curved tables during the next two steps.

J.2 Remove the test stand. Measure the distance, to the nearest millimeter, from the focal spot to the tabletop and enter the distance at Item 2.

J.3 Measure the distance, to the nearest millimeter, from the tabletop to the film plane of the Under Table Image Receptor (UTIR) and enter this distance at Item 3.

K. kV Compensation

Note: Skip this section if only mAs is selectable.

K.1 Select 80 kVp, if possible. Make an exposure. Enter the mA station chosen, the measured kV and the focal spot used (Small or Large) at Items 1a-1c.

K.2 Utilizing a constant mAs each time, increase the mA to evaluate the kV compensation and make three additional exposures. Enter the selected mA values, the respective measured kV and focal spot used at Items 2a-4c.

L. Acutal Versus Indicated Field Size

L.1 Enter Y or N at Item 1 to indicate if the beam limiting device numerically indicates the field size.

Note: IF a NO is recorded, skip this section.

L.2 Adjust the collimator to a commonly used film size for the SID selected. Enter the indicated **ALONG**-table dimension at Item 2a1 or 2a2, depending upon if the dimensions are inches or centimeters.

L.3 Enter the indicated **ACROSS**-table dimension at Item 2b1 or 2b2, depending upon if the dimensions are inches or centimeters.

L.4 Activate the collimator light field, and measure the dimensions of the light field at the tabletop to the nearest millimeter. Enter the **ALONG**-table dimension at Item 3a and the **ACROSS**-table dimension at Item 3b.

M. X-Ray Field/Light Field Alignment

M.1 Refer to the film from Slot #6 that was developed in Step D.1.

M.2 Measure the dimension of the light field on the film in the **ALONG**-table direction to the nearest millimeter and enter the value at Item 1a.

M.3 Measure the dimension of the light field on the film in the **ACROSS**-table direction to the nearest millimeter and enter the value at Item 1b.

M.4 Measure the dimension of the x-ray field on the film in the **ALONG**-table direction to the nearest millimeter and enter the value at Item 2a.

M.5 Measure the dimension of the x-ray field on the film in the **ACROSS**-table direction to the nearest millimeter and enter the value at Item 2b.

M.6 Measure the distance between the x-ray field and the outside edge of the metal marker. Write down these values for all four sides of the film. Add up the values for the **ALONG**-table dimension of the film and enter that number at Item 3a.

M.7 Add up the values for the **ACROSS**-table dimension of the film and enter that number at Item 3b.

N. X-Ray Field/UTIR Centers Comparison

N.1 Refer to the film from the Bucky that was developed in Step D.1.

N.2 Locate the center of the x-ray film by intersecting the corner diagonals. Locate the center of the x-ray field by drawing diagonal lines from the corners of the image of the field.

N.3 Measure and enter the misalignment between the center of the x-ray field and the center of the test film at Item 1.

O. PBL Operation

O.1 Enter the type of PBL system in use at Item 1, using the codes from the survey page. Skip this section of no PBL system is present.

O.2 Enter Y or N at Item 2 to indicate if the collimator can be adjusted to a field size smaller than the image receptor while the PBL system is activated.

O.3 Enter Y or N at Item 3 to indicate if there is an automatic return to PBL when the image receptor size or the SID is changed (keeping the SID in the range it is intended to operate).

O.4 Enter Y or N at Item 4 to indicate if x-ray production is prevented at an SID where the PBL system is not intended for operation. Enter an X if this cannot be determined.

P. PBL Sizing

P.1 Enter the indicated SID from the gantry in Item 1. Select a distance commonly utilized by the facility. Be sure to match units of measurement.

P.2 Insert an empty cassette in the UTIR. Enter the nominal cassette dimensions in Items 2a. Make sure to enter the **ALONG**-table dimension first. Be sure to match units of measurement, and enter in item 2b.

P.3 Activate the light field and enter the **ALONG**-table light field dimension as measured at the tabletop at Item 3a.

P.4 Activate the light field and enter the **ACROSS**-table light field dimension as measured at the tabletop at Item 3b.

P.5 Select a different cassette size and insert in the UTIR. Enter the nominal cassette dimensions in Items 4a. Make sure to enter the **ALONG**-table dimension first. Be sure to match units of measurement, and enter in item 4b.

P.6 Activate the light field and enter the **ALONG**-table light field dimension as measured at the tabletop at Item 5a.

P.7 Activate the light field and enter the **ACROSS**-table light field dimension as measured at the tabletop at Item 5b.

P.8 If a vertically mounted cassette holder, e.g., "Wall Bucky", is **not** present, **skip steps P.9 - P.11 and proceed with step P.12.**

P.9 If a vertically mounted cassette holder, e.g., "Wall Bucky", is present, rotate the tube head and align the unit with the wall cassette holder. Set at 72" or other useable distance. **Check** to make sure the detents are engaged.

P.10 Measure the distance in cm. from the front plate of the cassette holder to the center of the film plane, and record at Item 6. Next, measure the distance in cm. from the source to the front plate and record at Item 7.

P.11 Place a loaded film cassette into the Wall Bucky and manually collimate the light field (or use the field reduction light) to provide at least a 2 inch border on all sides of the film. Set the controls for a non-grid chest technique and make an exposure. Remove the cassette and process the film. Measure the centers misalignment as described in Section N. above. Enter the misalignment in cm. in data Item 8.

P.12 Enter the indicated SID for either the Wall Bucky (if present), or adjust the gantry over the table to a new SID. Enter the indicated SID at Item 9 in inches or cm.

P.13 Insert an empty film cassette in the Wall Bucky or insert the cassette used in P.1 in the UTIR, if no Wall Bucky is present. Enter the nominal cassette dimensions and the units of measurement in Items 10a and 10b. Make sure to enter the **ALONG**-table or **VERTICAL** dimension first.

P.14 Activate the light field and enter the **ALONG**-table or **VERTICAL** light field dimension as measured at the front plate or tabletop at Item 11a.

P.15 Activate the light field and enter the **ACROSS**-table or **HORIZONTAL** light field dimension as measured at the tabletop or front plate at Item 11b.

P.16 Select a second cassette size and place in the Wall Bucky or UTIR (select the same cassette used in P.5). Enter the nominal cassette dimensions and the units of measurement in Items 12a and 12b. Make sure to enter the **ALONG**-table or **VERTICAL** dimension first.

P.17 Activate the light field and enter the **ALONG**-table or **VERTICAL** light field dimension as measured at the tabletop or front plate at Item 13a.

P.18 Activate the light field and enter the **ACROSS**-table or **HORIZONTAL** light field dimension as measured at the tabletop or frontplate at Item 13b.

Q. Comments and Observations

This section is used to enter notes during the survey. This information **MAY** be printed on the final report using the computer program.

5. CALCULATION PROCEDURES

B. Illuminance

The illuminance values are the difference between the total and ambient readings for each quadrant.

D. Reproducibility

D1. Refer to data items D1a, D2a, D3a, and D4a of the survey sheets. (If ten exposures were made, include data Items D5a-D10a also.)

a. Using the following equation, with n=4 or n=10, as appropriate, calculate the average exposure, $\overline{E}_1$:

$$\overline{E_1} = \frac{\left(\sum_{i=1}^{n} x_i\right)}{n}$$

where x_i represents the data items referred to above.

b. Calculate the coefficient of variation, C_1, as follows:

$$C_1 = \frac{100}{\overline{E}_1}\left[\sum_{i=1}^{n} \frac{\left(x_i - \overline{E}_1\right)^2}{(n-1)}\right]^{\frac{1}{2}}$$

where n=4 or n=10, depending upon the number of exposures.

D2. Refer to data items C2, C3 and C4 of the survey form. Compute the mAs, if data item C4 is blank, by multiplying C2*C3.

D3. Calculate the average exposure per mAs, $\overline{X}_1$, as follows:

$$\overline{X}_1 = \frac{\overline{E}_1}{mAs}$$

E. mA Linearity

E1. Refer to data items E2 through E5, calculating the average exposure, $\overline{E_2}$, as follows:

$$\overline{E_2} = \frac{\left(\sum_{i=1}^{n} x_i\right)}{n}$$

where the x_i are the data items referred to above.

E2. Calculate the coefficient of variation, C_2, as in step D1b:

$$C_2 = \frac{100}{\overline{E}_2}\left[\sum_{i=1}^{n} \frac{\left(x_i - \overline{E}_2\right)^2}{(n-1)}\right]^{\frac{1}{2}}$$

where the x_i are the data referred to above.

E3. Refer to data items E1 and C3 of the survey form. Compute the mAs by multiplying E1*C3.

E4. Calculate the average exposure per mAs for the new mA station used, $\overline{X}_2$, as follows:

$$\overline{X}_2 = \frac{\overline{E}_2}{mAs}$$

E5. Calculate the Coefficient of Linearity, L, as follows:

$$L = \left[\frac{\left| \overline{X}_2 - \overline{X}_2 \right|}{\left(\overline{X}_1 + \overline{X}_2 \right)} \right] * 100$$

where $\underline{X}_1$ and $\underline{X}_2$ are the values calculated in steps D3 and E4 above

F. Radiation Output Linearity

F1. Exposures taken within this section should be ranked according to focal spot size and increasing mA station or increasing mAs selection if only mAs is selectable.

F2. Each mA station is compared to that immediately preceding it on the ranked list according to the following formula for linearity:

$$L = \left[\frac{\left| X_n - X_{n-1} \right|}{\left(X_n + X_{n-1} \right)} \right] * 100$$

where X_n is the measured output (column e) divided by the mAs. Do not compare stations of differing focal spot size.

G. Timer Linearity

G1. Exposures taken within this section should be ranked according to increasing timer station size.

G2. Each timer station is compared to that immediately preceding it on the ranked list according to the following formula for linearity:

$$L = \left[\frac{\left| X_n - X_{n-1} \right|}{\left(X_n + X_{n-1} \right)} \right] * 100$$

where X_n is the measured output (data Items G3b-G8b) divided by its respective mAs (data Items G3a-G8a times data Item G2).

H. Beam Quality

H1. Let data Items H2a-H7a be represented by a_i, and data Items H3b-H7b be represented by b_i, where $3 \leq i \geq 7$ for the following equations:

$$A = \sum_{i=1}^{n} \log(a_i)$$

$$B = \sum_{i=1}^{n} b_i$$

$$Y = \sum_{i=1}^{n} b_i * \log(a_i)$$

$$Z = \sum_{i=1}^{n} (b_i)^2$$

H2. Then the linear regression to determine the "best fit" line for the observed data is calculated according to the following formula:

$$\acute{Y} = m * HVL_{obs} + C$$

where,

$$m = slope \frac{Y - \frac{A * B}{n}}{Z - \frac{B^2}{n}}$$

$$c = y - intercept = \frac{A}{n} - \frac{\left[y - \frac{A * B}{n} \right] * \frac{B}{n}}{\left[Z - \frac{B^2}{n} \right]}$$

HVL_{obs} = mm Al at the point Ý = log(½[data Item H2a])

H3. Correcting for the geometry and energy dependence using the MDH gives:

HVL_{actual} = (HVL_{obs} * 0.923) + 0.165

H4. Alternatively, the normalized exposures (data Items H2a-H7a divided by _1 above) vs. aluminum thickness can be graphed on semi-log paper and the observed HVL read off the linear scale. The Actual HVL is corrected as in step H3 above.

I. kV Accuracy

The KV ACCURACY is expressed as a % difference between the indicated and measured kV values (K):

$$D = \frac{|K_{ind} - K_{meas}|}{K_{ind}} * 100$$

J. kV Compensation

The KV COMPENSATION is expressed as a % difference between the indicated and measured kV values (K) at differing mA stations according to the above equation. Note: For this procedure, $K_{ind} = 80$.

K. SID Determination

Calculate the % deviation between the Indicated and Measured SID as:

$$D = 100 * \frac{|SID_{ind} - SID_{meas}|}{SID_{ind}}$$

where SID_{ind} is Data Item K1a*2.54 or K1b, and SID_{meas} is data Items (K2 + K3).

L. Actual Versus Indicated Field Size

L1. Convert data Items L2a1, L2b1, and K1a to centimeters, if necessary.

L2. Calculate the ALong-table Correction Factor (ALCF) by dividing data Item M2a by data Item M1a.

L3. Calculate the ACross-table Correction Factor (ACCF) by dividing data Item M2b by data Item M1b.

L4. Calculate the along-table x-ray field dimensions as:
C_{AL}=ALCF * data Item L3a * (data Items K2+K3)/data Item K2

L5. Calculate the across-table x-ray field dimensions as:
C_{AC}=ACCF * data Item L3b * (data Items K2+K3)/data Item K2

L6. Calculate the % along-table difference as:
% difference = [(C_{AL} - data Item L2a)/data Item K1]*100

L7. Calculate the % across-table difference as:

% difference = [(C_{AC} - data Item L2b)/data Item K1]*100

M. X-Ray Field/Light Field Alignment

M1. The length misalignment, as a % of the SID (data Item K2-4.6 cm), is calculated using data Item M3a (M_L):

$$LM = \frac{M_L}{SID} * 100$$

M2. The width misalignment, as a % of the SID (data Item K2-4.6 cm), is calculated using data Item M3b (M_W):

$$WM = \frac{M_w}{SID} * 100$$

N. X-Ray Field/UTIR Centers Comparison

The centers misalignment, as a % of the SID (data Items K2+K3), is calculated using data Item N1 (M_C):

$$CM = \frac{M_c}{SID} * 100$$

If a Wall Bucky is present, use the above formula, with data Item P8 as the M_c. The measured SID is (data Item P6+P7).

P. PBL Sizing

P1. Convert all data Items to centimeters as necessary.

P2. Calculate the along-table x-ray field size for the first cassette size and Indicated SID selected:

C_{AL}=ALCF * data Item P3a * ISID / (ISID - data Item K3)

P3. Calculate the along-table difference

D_{AL} = C_{AL} - data Item P2a

P4. Calculate the % along-table difference:

% difference = (D_{AL} * 100)/ISID

P5. Repeat steps P2 to P4 for the across-table data for the same cassette and SID.

P6. Calculate the sum of the % differences along and across the table:

Total % difference = abs(% difference along) + abs(% difference across)

P7. Repeat steps P2 through P6 for each additional combination of cassette size and ISID.

MOBILE RADIOGRAPHIC SYSTEMS
USE and PERFORMANCE EVALUATION

Surveyor's Instructions

1. INTRODUCTION

The Mobile Radiographic Systems Use and Performance Evaluation form is intended to provide data that will give a comprehensive evaluation of the use and performance of a mobile or portable radiographic system. If collected properly, the data will be compatible with CDRH compliance program data.

2. SPECIFIC GUIDANCE

Some battery powered mobile x-ray systems incorporate a battery charge compensator. For the purpose of reproducibility testing, the battery range switch should be considered as a fourth technique factor to be left in the same position for all four exposure measurements.

On equipment with line voltage compensators be sure the indicator is in the proper region before performing any compliance test that depends on electrical power (e.g., exposure output, light illumination, etc.).

Caution

Consult the system's duty cycle information and anode cooling curves to ensure that the following series of exposures will not exceed the manufacturer's anode heat loading specifications. If the proper cooling time between exposures cannot be determined, use the following guidance:

a. Rotating anode tubes: Wait 60 seconds after every accumulated 5,000 heat units.

b. Stationary anode tubes: Wait 30 seconds between exposures of less than 900 heat units, and 60 seconds between exposures of 900 to 1,800 heat units.

3. PRETEST CHECKLIST:

Turn on the main power to the x-ray system.

Connect the 6-cm^3 ionization chamber to the electrometer. Set the mode selector switch to EXPOSURE RATE and the function selector to MEASURE. Allow the electronics 10 seconds to stabilize. After 10 seconds, the exposure rate should be less than 4 mR/min. If it is not, the

instrument may be defective, and you should contact the CDRH for guidance. Set the Pulse - Fraction Threshold on the MDH instrument to 0.5. Turn the selector switch to PULSE/EXPOSURE prior to taking measurements.

4. GENERAL INSTRUCTIONS:

Facility Name:

Enter the name of the facility as it appears on the IHS/DEH Facility Data System listing or other agency facility listing system.

Person Contacted:

Enter the name of the person contacted at the facility during the survey, e.g., radiological technician, radiologist, etc.

Survey Date:

Enter in the date that this form is filled out at the facility. Use a MM-DD-YY format as indicated. For example, June 9, 1990 would be recorded as 06-09-90.

Surveyor ID:

IHS employees enter in their 3 digit EHRS identification number. Other users enter in their initials or other ID of the surveyor who completed this survey form.

Manufacturer, Date of Manufacture, Model & Serial Numbers:

Enter in the appropriate information from the control panel label of the x-ray unit.

Note: If any item on this survey form is not applicable, or is being skipped, draw a line through the data boxes for that item to indicate to the reviewers that it has been considered, not missed.

As used in this protocol the term **INDICATED** means a value observed by the surveyor from a meter or dial that is a part of the system being surveyed; **MEASURED** means a value that is obtained from a physical measurement by the surveyor.

A. General Information

A.1a Enter in the unique IHS Facility Data System (FDS) number for this particular unit. Other agencies enter in some unique identifier such as an agency inventory control number. The computer program uses this field to SEARCH through the data base.

A.1b Enter in the System ID number (CDRH #) at Item 1.b. This number is optional for IHS facilities.

A.2 Enter in the room number or usual location of the radiographic system.

A.3 Enter Y or N to indicate if the exposure cord on this system is long enough so that the operator can stand over 2 meters (6 feet) away from the tubehead during an exposure.

A.4 Enter Y or N to indicate if the operator ROUTINELY wears a lead apron while making an exposure.

A.5 Enter Y or N to indicate that if a radiation warning label is on the control console of the x-ray unit.

A.6 Enter Y or N to indicate if the exposure settings (or technique factors) are visible to the operator before an exposure is taken.

A.7 Enter Y or N to indicate if the tubehead and support arm are stable when positioned.

A.8 Enter Y or N to indicate if the electrical cables appear to be in good condition.

A.9 Enter Y or N to indicate if routine Quality Control tests are performed on this unit.

A.10 Enter **B**(oth) to indicate if a QA or a maintenance logbook exists for this unit. If either is not maintained, enter **N**(o).

B. Initial Set-Up

B.1 Assemble the test stand with the spacer assembly positioned out of the beam. Place the test stand on a stable, horizontal surface and position the diagnostic source assembly over the test stand with the x-ray beam axis aimed vertically downward so that it is centered over the test stand. Orient the test stand so the long axis of the base is parallel to the long axis of the tube. (Similar to the setup for an above-table radiographic unit.)

B.2 Remove any extra filtration from the tube housing assembly. This may be accomplished by removing any aluminum from the slot in the tube housing assembly or dialing the filtration to the minimum setting, depending upon the type of machine present. **Under no circumstances should the surveyor disassemble the tube housing assembly to remove filtration.**

B.3 Lower the diagnostic source assembly until the beam-limiting device comes into firm contact with the spacer assembly, or until any spacer bars on the beam limiting device are even with the top of the spacer assembly. Make sure the light field is not shielded by the stand. Make sure that space is available between the stand and the x-ray tube/collimator assembly for ease in inserting the aluminum filters for the HVL tests.

B.4 Place the slide assembly, grid side facing up, in slot #6 of the test stand. Place the focal spot assembly, brass strips facing up, into slot #1 of the test stand. Load an 8" x 10" film in a cardboard cassette and place it in the slide assembly.

B.5 Insert the ion chamber assembly through the lower chamber mounting hole in the test stand, ensure that it will be fully exposed by the radiation beam, and secure it with the retaining ring. Also ensure that the probe is centered in the radiation beam and recheck for proper alignment.

B.6 Collimate the light field size to approximately 4" x 6" at the slide assembly grid. Place metal markers at all four of the <u>inside edges</u> of the visual field.

B.7 Enter the exposure settings (technique factors) selected for use in the reproducibility tests in the spaces indicated as Items 1-4 of Section B. Select 90 kVp, 4 to 6 mAs, if possible. If mA and time can be separately selected enter in those values and draw a line through the boxes for mAs. If only mAs is selectable, enter that value and draw a line through the boxes for mA and time.

C. Reproducibility

Note: If applicable, check for full battery charge before starting the test.

C.1 Make four exposures using the technique factors selected in Section B. Enter the exposure and time measurements as indicated in Items 1a through 4b.

Note: Remove the film from the slide assembly after the first exposure! Develop it and save it for measurements for Sections K and L.

Note: Allow time for tube cooling between each exposure.

Note: Record the exposure measurements to the nearest whole number. DO NOT record decimal fractions. Switch the mode selector to PULSE DURATION and record time measurements.

Note: Change all variable controls for technique factors to alternate settings and reset to the test setting after each exposure measurement. Do not reset the MDH meter between readings.

C.2 If the first four exposure values do not appear to be reproducible (i.e., each measurement is not within 10% of the highest exposure reading), make six (6) additional exposures. Enter the exposure and time measurements as indicated in Items 5a through 10b.

D. mA Linearity

Note: If mA is not selectable, skip this section and section F. Timer Linearity.

D.1 Enter the new mA station selected at Item 1. Ensure that the new mA is not more than twice, or less than half, of the original setting. Ensure that the kVp remains constant. DO NOT change the timer setting.

D.2 While varying the technique factors between each measurement as in the Reproducibility test, make four exposures and enter the exposure measurements as indicated at Items 2 through 5.

E. Radiation Output Linearity

E.1 Enter the kVp to be maintained for these tests at Item 1. Select 90 kVp, if possible.

E.2 If separate mA and timer stations are available, maintain a constant time, and vary the mA station. If a change in mA causes a kVp shift, readjust the kVp (if possible) to the value selected above. Enter the indicated mA, time and the measured exposure for each station tested at Items 2a, 2b and 2d through 8a, 8b and 8d. Draw a line through the boxes for the mAs station.

E.3 If only mAs stations are available, enter the indicated mAs and the measured exposure for each station tested at Items 2c and 2d through 8c and 8d. Draw a vertical line through the columns for the mA and time stations.

F. Timer Linearity

Note: Skip this section if only mAs stations are available.

F.1 Maintain the same kVp as in Section E and set the tube current at 100 mA.

F.2 Vary the timer settings in a consistent manner, entering the indicated timer setting chosen and the measured exposure in Items 1a and 1b through 6a and 6b. Select the longest time setting typically used by the facility for the **first** exposure. (Avoid measurements below 20 milliseconds, as the manufacturers' timer accuracy acceptable variation below this range often is ± 50%).

G. Beam Quality

Note: The intent of this test is to determine the minimum amount of filtration that is inherent in the tube housing.

G.1 Set the peak tube potential to a value commonly used, provided that the value exceeds 70 kVp. Maintain 90 kVp, if possible. Do **not** record the selected kVp at Item 1, the **actual** kVp value will be entered after testing in **Section H, KV ACCURACY**.

G.2 Set the x-ray monitor mode selector to PULSE EXPOSURE. The x-ray monitor should read -0.00. If any other display is present, reset the instrument by switching the function selector to HOLD and then back to MEASURE.

G.3 Select a combination of mA and time that will give an exposure of at least 100 mR. If the capability is provided for adjustment of the filtration present in the useful beam, adjust for the minimum amount of filtration that will allow an exposure. Make an exposure and enter in the exposure reading with NO additional aluminum filtration in the beam in Item 2a.

Note: It is essential for proper data processing that the beam quality determination be made using increasing amounts of aluminum; e.g. 1.5 mm Al, 2.5 mm Al, 3.5 mm Al, and 4.5 mm Al.

G.4 Place aluminum in slot #1 to obtain totals of 1.5, 2.5, 3.5, and 4.5 mm Al. and make an exposure for each total. Enter in the measured exposure and the millimeters of aluminum utilized in Items 3a through 6b.

G.5 If the HVL has not been achieved with 4.5 mm Al., select an appropriate amount of aluminum so that the HVL will be exceeded in the next exposure. Enter in the exposure and the mm Al utilized in Items 7a and 7b. (Usually HVL adequacy is indicated if the reading measurement achieved at 2.5 mm Al. is higher than 1/2 of the value measured when no aluminum was in the beam.)

Note: Prior to disassembling the test stand, the following measurement needs to be taken and recorded. At this point in the procedure, movement of the test stand for accurate measurements is not a problem.

G.6 Enter the measured source (focal spot) to film plane distance in centimeters in the space indicated at **Item number 1** of **Section K, X-RAY/LIGHT FIELD ALIGNMENT**.

H. kV Accuracy

H.1 **SET-UP:** Following the manufacturer's recommendations, arrange the kV meter and the x-ray tube into the configuration necessary for the type of kV meter being utilized.

H.2 Set the x-ray unit for the highest kV normally utilized by the facility (e.g. Technique for chest exposure) and enter this value in Item 1a. Most mobile systems have a maximum kVp capacity to generate only 150 kVp.

H.3 Set the x-ray unit's timer at 100 milliseconds and utilize an mA setting high enough to allow the kV meter to operate. Make an exposure and enter the measured kilovoltage in Item 1b. If only mAs is selectable, utilize the smallest mAs setting possible that will allow the kV meter to operate.

H.4 Maintain, and enter, the kV setting from H.2 above in Item 2a.

H.5 Make an exposure and enter the measured kV in Item 2b.

H.6 Select two other kV stations commonly utilized by the facility and enter the indicated kVp at Items 3a and 4a. Select an adequate mAs to allow the kV meter to operate. Make the exposures and enter the measured kV at items 3b and 4b respectively.

Note: One of the kV settings tested in this section must be the one used in **Section G, BEAM QUALITY**. In the event that the accuracy is off to a large extent, this should prevent an error message based on calculating HVL on the indicated kVp rather than the actual value. After testing, enter the **MEASURED** kV value from the meter reading at **Item 1 of SECTION G, BEAM QUALITY**.

H.7 Different kV meters measure different aspects of the kV waveform. Enter the type of kV measurement performed (Average, Peak, Effective) at Item 5.

I. kV Compensation

Note: Skip this section if only mAs is selectable.

I.1 Select 80 kVp, if possible. Utilizing a constant mAs, increase the mA to evaluate the kV compensation. Enter the selected mA and the measured kV at Items 1a through 4b respectively.

J. Illuminance

J.1 **SET-UP:** Adjust the tube housing so that the distance from the x-ray source to the sensing element of the light meter is 100 centimeters. Adjust the collimators for the largest field size. Measure the light from the center of each quadrant.

1	2
3	4

(100cm is = 40" source to table top distance.)

J.2 Turn the room lights down and the collimator light on and record the measured total illuminance from each quadrant as indicated in the SET-UP figure in Items 1T through 4T. Next, with the room lights at the same light level, record the ambient illuminance from each quadrant when the collimator light is off in Items 1A through 4A. Subtract these two values. Enter in the net illuminance for each quadrant in Items 1 through 4.

J.3 An alternative to the above is to turn the room lights **out completely** and directly read the collimator light illuminance. Enter these results in Items 1 through 4. (These values would be entered in Items 1T through 4T for the computer program).

K. X-Ray Field/Light Field Alignment

Note: Refer to the film produced during the initial section.

(Alternate methods exist to test this parameter. The RMI alignment tool is one popular method which uses a grid to align the visual field with known markers on the grid. The test is performed as above, except that the tool is placed directly on top of the cassette rather than the metal markers, and the beam is collimated to the known grid dimensions.)

K.1 While viewing the radiographic image note the location of the metal markers. Measure the distance between the x-ray field and the outside edge of the metal markers. Write down these values for all four sides of the film. Length misalignment (ALONG table) may be considered to be the sum of the misalignment of the two short edges of the x-ray field with the outside edges of the metal markers. Add up the values for the smaller dimension of the film and enter that number in Item 2a.

K.2 The width misalignment (ACROSS table) is determined similarly for both longer edges of the field. Add up the values for the larger dimensions of the film and enter that number in Item 2b.

L. Minimum Source to Skin Distance:

Note: Refer to the film produced during the initial section.

L.1 Enter in the measured outside dimension of the image of the focal spot test strips in Item 1.

M. Standby Radiation:

Note: Perform this test only if the x-ray system is of the capacitor energy storage type.

M.1 **SET-UP:** Replace the $6cm^3$ radiation probe of the MDH with the $100cm^3$ probe. Open the beam limiting device fully and place the chamber as close as possible to the face of the collimator. Charge the capacitors fully and select the maximum kVp setting. Set the MDH to MEASURE and without engaging the exposure switch, measure the standby radiation emission for two (2) minutes.

M.2 Enter in the measured radiation exposure and the time interval in Items 1a and 1b. If no discernible exposure occurs, enter in 0.000 mR in Item 1a.

N. Comments and Observations:

This section is used to enter notes during the survey. This information **MAY** be printed on the final report using the computer program.

5. CALCULATION PROCEDURES

C. Reproducibility

C1. Refer to data items C1a, C2a, C3a, and C4a of the survey sheets. (If ten exposures were made, include data Items C5a-C10a also.)

a. Using the following equation, with n=4 or n=10, as appropriate, calculate the average exposure, $\overline{E_1}$:

$$\overline{E_1} = \frac{\left(\sum_{i=1}^{n} x_i\right)}{n}$$

where x_i represents the data items referred to above.

b. Calculate the percent coefficient of variation, C_1, as follows:

$$C_1 = \frac{100}{\overline{E}_1}\left[\sum_{i=1}^{n}\frac{\left(x_i - \overline{E}_1\right)^2}{(n-1)}\right]^{\frac{1}{2}}$$

where n=4 or n=10, depending upon the number of exposures.

C2. Refer to data items B2, B3 and B4 of the survey form. Compute the mAs, if data item B4 is blank, by multiplying B2*B3.

C3. Calculate the average exposure per mAs, $\overline{X}_1$, as follows:

$$\overline{X}_1 = \frac{\overline{E}_1}{mAs}$$

D. mA Linearity

D1. Refer to data items D2 through D5, calculating the average exposure, $\overline{E_2}$, as follows:

$$\overline{E_2} = \frac{\left(\sum_{i=1}^{n} x_i\right)}{n}$$

where the x_i are the data items referred to above.

D2. Calculate the percent coefficient of variation, C_2, as in step C1b:

$$C_2 = \frac{100}{\overline{E}_2}\left[\sum_{i=1}^{n}\frac{\left(x_i - \overline{E}_2\right)^2}{(n-1)}\right]^{\frac{1}{2}}$$

where the x_i are the data referred to above.

D3. Refer to data items D1 and B3 of the survey form. Compute the mAs by multiplying D1*B3.

D4. Calculate the average exposure per mAs for the new mA station used, $\overline{X}_2$, as follows:

$$\overline{X}_2 = \frac{\overline{E}_2}{mAs}$$

D5. Calculate the percent Coefficient of Linearity, L, as follows:

$$L = \left[\frac{\left| \overline{X}_2 - \overline{X}_2 \right|}{\left(\overline{X}_1 + \overline{X}_2 \right)} \right] * 100$$

where $\underline{X}_1$ and $\underline{X}_2$ are the values calculated in steps C3 and D4 above.

E. Radiation Output Linearity

E1. Exposures taken within this section should be ranked according to increasing mA station or increasing mAs selection if only mAs is selectable.

E2. Each mA station is compared to that immediately preceding it on the ranked list according to the following formula for linearity:

$$L = \left[\frac{\left| X_n - X_{n-1} \right|}{\left(X_n + X_{n-1} \right)} \right] * 100$$

where X_n is the measured output (column d) divided by the mAs.

F. Timer Linearity

F1. Exposures taken within this section should be ranked according to increasing mA station.

F2. Each timer station is compared to that immediately preceding it on the ranked list according to the following formula for linearity:

$$L = \left[\frac{\left| X_n - X_{n-1} \right|}{\left(X_n + X_{n-1} \right)} \right] * 100$$

where X_n is the measured output (data Items F1b-F6b) divided by its respective mAs (data Items F1a-F6a times 100 mA). For mobile x-ray units the computer program mA is set at 100.

G. Beam Quality

G1. Let data Items G2a-G7a be represented by a_i, and data Items G3b-G7b be represented by b_i, where $3 \leq i \geq 7$ for the following equations:

$$A = \sum_{i=1}^{n} \log(a_i)$$

$$B = \sum_{i=1}^{n} b_i$$

$$Y = \sum_{i=1}^{n} b_i * \log(a_i)$$

$$Z = \sum_{i=1}^{n} (b_i)^2$$

G2. Then the linear regression to determine the "best fit" line for the observed data is calculated according to the following formula:

$$\acute{Y} = m * HVL_{obs} + C$$

where,

$$m = slope \frac{Y - \frac{A * B}{n}}{Z - \frac{B^2}{n}}$$

$$c = y - intercept = \frac{A}{n} - \frac{\left[y - \frac{A * B}{n}\right] * \frac{B}{n}}{\left[Z - \frac{B^2}{n}\right]}$$

HVL_{obs} = mm Al at the point Ý = log(½[data Item G2a])

G3. Correcting for the geometry and energy dependence using the MDH gives:

$HVL_{actual} = (HVL_{obs} * 0.923) + 0.165$

G4. Alternatively, the normalized exposures (data Items G2a-G7a divided by _1 above) vs. aluminum thickness can be graphed on semi-log paper and the observed HVL read off the linear scale. The Actual HVL is corrected as in step G3 above.

H. kV Accuracy

The kV Accuracy is expressed as a % difference between the indicated and measured kV values (K):

$$D = \frac{|K_{ind} - K_{meas}|}{K_{ind}} * 100$$

I. kV Compensation

The KV COMPENSATION is expressed as a % difference between the indicated and measured kV values (K) at differing mA stations according to the above equation. Note: For the mobile procedure, $K_{ind} = 80$.

J. Illuminance

The illuminance values are the difference between the total and ambient readings for each quadrant.

K. X-Ray Field/Light Field Alignment

K1. The SID (Source to Image Distance), in cm, is calculated using the measured outside separation of the focal spot strips, data Item L1 (S) and standard geometry of the CDRH test stand:

$$SID = \frac{224.55}{(S - 6.35)} + 35.36$$

K2. The length misalignment, as a % of the SID, is calculated using data Item K2a (M_L):

$$LM = \frac{M_L}{SID} * 100$$

K3. The width misalignment , as a % of the SID, is calculated using data Item K2b (M_W):

$$WM = \frac{M_w}{SID} * 100$$

K4. The minimum Source to Skin Distance (SSD) is calculated using S as defined in step K1:

$$SSD = \frac{224.55}{(S - 6.35)} - 7.66$$

M. Stand-By Radiation

The standby radiation is calculated by converting the minutes and seconds of data Item M1b to hours and dividing it into data Item M1a to report mR/hour.

DENTAL RADIOGRAPHIC SYSTEM

USE and PERFORMANCE EVALUATION

Surveyor's Instructions

1. INTRODUCTION:

The Dental Radiographic Systems Use and Performance Evaluation form is intended to provide data that will give a comprehensive evaluation of the use and performance of a dental radiographic system designed for use with intra-oral image receptors. If collected properly, the data will be compatible with CDRH compliance program data.

When a step or entire section of the procedure is skipped: enter an asterisk in the first data item of that section; explain in the Remarks section why this was skipped; and continue on with the next appropriate section.

2. SPECIFIC GUIDANCE:

Some dental x-ray controls are provided with a manual line voltage compensator. In accordance with the user instructions, this compensator is to be used before each exposure to adjust the incoming line voltage to the proper value. This is usually done by adjusting the line voltage to a mark or a specific voltage range on an x-ray control meter face.

Caution: Consult the system's duty cycle information and anode cooling curves to ensure that the following series of exposures will not exceed the manufacturer's anode heat loading specifications. If the proper cooling time between exposures cannot be determined, use the following guidance:

a. Rotating anode tubes: Wait 60 seconds after every accumulated 5,000 heat units loading of the anode.

b. Stationary anode tubes: Wait 60 seconds between exposures of less than 900 heat units and 60 seconds exposures of 900 to 1,800 heat units.

3. PRETEST CHECKLIST:

Turn on the main power to the x-ray system.

Connect the 6-cm^3 ionization chamber to the electrometer. Set the mode selector switch to EXPOSURE RATE and the function selector to MEASURE. Allow the electronics 10 seconds to stabilize. After 10 seconds, the exposure rate should be less than 4 mR/min. If it is not, the instrument may be defective and you should contact CDRH for guidance. Set the Pulse - Fraction Threshold on the MDH instrument to 0.5. Turn the selector switch to PULSE/EXPOSURE prior to making measurements.

4. GENERAL INSTRUCTIONS:

Facility Name:

Enter the name of the facility as it appears on the IHS/DEH Facility Data System listing or other agency facility listing system.

Person Contacted:

Enter the name of the person contacted at the facility during the survey, e.g., radiological technician, radiologist, etc.

Survey Date:

Enter in the date that this form is filled out at the facility. Use a MM-DD-YY format as indicated. For example, June 9, 1990 would be recorded as 06-09-90.

Surveyor ID:

IHS employees enter in their 3 digit EHRS identification number. Other users enter in their initials or other ID of the surveyor who completed this survey form.

Manufacturer, Date of Manufacture, Model & Serial Numbers:

Enter in the appropriate information from the control panel label of the x-ray unit.

Note: If any item on this survey form is not applicable, or is being skipped, draw a line through the data boxes for that item to indicate to the reviewers that it has been considered, not missed.

As used in this protocol the term **INDICATED** means a value observed by the surveyor from a meter or dial that is a part of the system being surveyed; **MEASURED** means a value that is obtained from a physical measurement by the surveyor.

Tube Housing Model & Serial Numbers:

Enter in the appropriate information from the tube housing of the x-ray unit.

A. General Information

A.1a Enter in the unique IHS Facility Data System (FDS) number for this particular tubehead. Other agencies enter in some unique identifier such as an agency inventory control number. The computer program uses this field to SEARCH through the data base.

A.1b Enter in the System ID number (CDRH #) at Item 1.b. This number is optional for IHS facilities.

A.2 Enter in the operatory number of the dental tubehead.

A.3 Enter Y or N to indicate if the exposure cord or placement of the exposure switch for this unit is allows the operator to stand over 2 meters (6 feet) away from the tubehead during an exposure.

A.4 Enter Y or N to indicate if the operator can stand in a shielded area while making an exposure.

A.5 Enter Y or N to indicate that if a radiation warning label is on the control console of the x-ray unit.

A.6 Enter Y or N to indicate if the exposure settings (or technique factors) are visible to the operator before an exposure is taken.

A.7 Enter Y, N or X to indicate if visible indications are present as to which tubehead has been selected when multiple tubeheads are controlled by a single exposure switch. Indicators should be at both the tubehead and the console.

A.8 Enter Y or N to indicate if the tubehead and support arm are stable when positioned.

A.9 Indicate the type of Position Indicating Device (PID) on the tubehead: Open-ended (O) or Pointer (P) cone.

A.10 Enter the average number of exposures taken each week using this unit.

A.11 Enter D or E to indicate the type of film used within the facility.

A.12 Enter Y or N to indicate if quality control tests are routinely performed on this unit.

A.13 Enter **B**(oth) to indicate if a QA and a maintenance logbook exists for this x-ray unit. If either book is not maintained, enter **N**(o).

B. Initial Set-Up

B.1 Remove any extra filtration from the tube housing assembly, if possible. This may be accomplished by removing any aluminum from the slot in the tube housing assembly or dialing the filtration to the minimum setting, depending upon the type of machine present. **Under no circumstances should the surveyor disassemble the tube housing assembly or position indicating device to remove filtration.**

B.2 Place the test stand on a stable, horizontal surface suitable for supporting the test stand and other test equipment (e.g., a table, countertop, and so forth).

B.3 Attach the spacer assembly, positioned out of the beam, to the top of the test stand.

B.4 Insert the ion chamber assembly through the upper chamber mounting hole in the test stand and secure with the retaining ring.

B.5 Center the tubehead above the radiation probe so that the PID is just touching the probe. Ensure that the probe is in the center of the radiation beam.

Note: Remote control stations often have duplicate indication of technique factors that may or may not agree with the indication at the master control panel. The technique to be recorded should be that which is indicated at the operator's position.

B.6 Enter the exposure settings (technique factors) used by the facility for an average adult bitewing projection in the spaces indicated as Items 1-5 of Section B. If mA and Time can be separately selected, draw a line through the boxes for mAs. If only mAs is selectable, draw a line through the boxes for mA and Time.

C. Exposure at Cone Tip - Reproducibility

Note: If the x-ray unit has not been used recently, follow the dental office's procedure for warming up the unit prior to making these exposures.

Set the MDH to PULSE EXPOSURE.

C.1 Make an exposure at the selected technique factors. Record this reading of exposure at Item 1a. Do not record a time reading.

C.2 (a) Make three additional exposures, with the exposure readings being recorded at Items 2a, 3a, and 4a, and the time readings at Items 2b, 3b, and 4b. All variable controls for technique factors shall be adjusted to alternate settings and reset to the test setting after each measurement.

(b) If any two readings differ by more than 10 percent of the highest mR reading, take 6 additional exposures. Record the exposure and the time readings at Items 5a through 10b. Do not reset the x-ray monitor between readings.

D. mA Linearity:

Note: If the unit under test either does not allow specific selection of tube current, or if only mAs is selectable, then omit this section.

D.1 (a) If the tube current selection is in fixed stations, select an adjacent tube current station and record the indicated value at Item 1.

OR

(b) If tube current selection is continuous (i.e., not in discrete steps), select a second tube current not differing from the first by more than a factor of 2. Record at Item 1.

Note: The change in the tube current may cause a change in tube potential. If manual compensation is available, readjust the tube potential to its original value, and continue. However, if the kVp cannot be compensated back to its original setting, enter an asterisk in the first column of Item 2, skip procedural steps D.2 and D.3 and state in the Remarks that the kVp could not be compensated.

D.2 Make an exposure at the selected technique factors. Record this reading at Item 2.

D.3 While varying technique factors between each measurement as in step C.3, make three additional exposures. Record the exposure readings at Items 3, 4, and 5.

E. Timer Linearity:

Note: If the unit under test either does not allow specific selection of timer stations, or if only mAs is selectable, then omit this section.

Note: Maintain the same kVp as in SECTION B and set the tube current at **10 mA**, if possible.

E.1 Enter the mA station selected in the space at Item 1.

E.2 Select the longest timer setting typically used by the facility. Enter the indicated time and the measured exposure value in Items 1a and 1b respectively.

E.3 Vary the timer settings in a consistent manner and enter the indicated time and measured exposure for other timer stations in Items 2a - 6b.

The following table can be used to convert pulses to decimal seconds for entering into the field record:

Pulses	Seconds	Pulses	Seconds	Pulses	Seconds	Pulses	Seconds
1	0.017	16	0.267	31	0.517	46	0.767
2	0.033	17	0.283	32	0.533	47	0.783
3	0.050	18	0.300	33	0.550	48	0.800
4	0.067	19	0.317	34	0.567	49	0.817
5	0.083	20	0.333	35	0.583	50	0.833
6	0.100	21	0.350	36	0.600	51	0.850
7	0.117	22	0.367	37	0.617	52	0.867
8	0.133	23	0.383	38	0.633	53	0.883
9	0.150	24	0.400	39	0.650	54	0.900
10	0.167	25	0.417	40	0.667	55	0.917
11	0.183	26	0.433	41	0.683	56	0.933
12	0.200	27	0.450	42	0.700	57	0.950
13	0.217	28	0.467	43	0.717	58	0.967
14	0.233	29	0.483	44	0.733	59	0.983
15	0.250	30	0.500	45	0.750	60	1.000

E.4 Mechanical Timer Functional Requirements

Important! This section is applicable only to systems having a mechanical rather than electronic exposure timer. The mechanical timer will always have a zero time position while the electronic timer does not have a zero time position.

(a) If the system being tested has an electronic timer, record an "X" at Items 7 and 8 and proceed with SECTION F.

(b) Set the timer to the ZERO or OFF position, if possible.

Attempt to make an exposure with the timer in this position, using the x-ray monitor to determine if an exposure has actually occurred.

Was it possible to make an exposure with the timer in the "zero" or "off" position? Record at Item 7.

(c) At the controls, select the lowest available kVp and tube current setting and an exposure time of 1 second.

Set the x-ray monitor mode selector to PULSE DURATION. Reset the MDH instrument by switching the function selector to HOLD and then back to MEASURE.

Depress the exposure switch for the full duration of the selected exposure time. Record for future reference the exposure time reading from the MDH.

Depress the exposure switch momentarily, releasing it before the timer can terminate the exposure.

Reset the MDH instrument by switching the function selector to HOLD and then back to MEASURE.

Depress the exposure switch for the full duration of the selected exposure time. Compare the exposure time reading from the MDH with the value obtained above.

Did the timer reset either to zero or to the initial setting after the first incomplete exposure? Record at Item 8.

F. mAs Linearity:

Note: If the unit under test DOES allow specific selection of timer stations, then omit this section.

Note: Maintain the same kVp as in SECTION B.

F.1 Select the longest mAs setting typically used by the facility. Enter the indicated mAs and the measured exposure value in Items 1a and 1b respectively.

F.2 Vary the mAs settings in a consistent manner and enter the indicated mAs and measured exposure for other mAs stations in Items 2a - 6b.

G. Beam Quality:

Note: The intent of this test is to determine the minimum amount of filtration that is inherent in the tube housing.

SET-UP: Reposition the tubehead so that it is centered over the test stand and the end of the PID is even with the spacer assembly on top of the stand.

G.1 If the maximum operable kVp control setting is greater than 70, set the kVp to a value over 70.

OR

If the maximum operable kVp control setting is between 50 to 70, set the kVp to the maximum value. Do **not** record the selected kVp at Item 1, the **actual** kVp value will be entered after testing in **Section I, KV ACCURACY**.

G.2 Set the x-ray monitor mode selector to PULSE EXPOSURE. The x-ray monitor display should read -0.00. If any other display is present, reset the x-ray monitor by switching the function selector to HOLD and then back to MEASURE.

G.3 Make an exposure without any additional aluminum in the beam and record the reading (exclusive of the minus sign) at Item 2a.

G.4 Select the appropriate values of aluminum from the chart on the survey form, depending upon the kVp selected. Do NOT remove any filtration that is present in the tube housing assembly.

Important!

It is critical to use the values of filtration called for on the survey form. Data taken with filtration inappropriate for the selected kVp, as specified in these steps, may result in false noncompliance.

G.5 Enter the exposure reading and corresponding thickness of aluminum for each exposure at Items 3a through 6b.

H. X-Ray Field Size and Shape/Minimum SSD:

SET-UP: Place the focal spot assembly, brass strips facing up, in the top slot (#1) of the test stand. Reposition the spacer assembly **in the beam**. Insert the slide assembly, grid side DOWN into **Slot #5** of the test stand. Load an 8" x 10" film in a cardboard cassette and place it between the spacer assembly and the PID. Load a second cassette and place it in the slide assembly.

H.1 Make an exposure using a combination of mA and Time that will produce a good image on the films. (Approximately 600mR is needed if using direct print paper instead of film). Develop the test films.

H.2 Using the film that was next to the PID, measure the diameter or diagonal dimension of the x-ray field. Enter the value, in centimeters, in the spaces of Item 1.

H.3 Enter C (circular) or (rectangular) R to denote the shape of the x-ray field on the film at Item 2.

H.4 Using the film from the slide assembly, enter the measured outside dimension of the image of the focal spot strips, in centimeters, in the spaces at Item 3.

I. kV Accuracy:

SET-UP: Remove the test stand and radiation probe. Following the manufacturer's recommendations, arrange the kV meter and the x-ray tube into the configuration necessary for the type of meter being used.

Note: One of the kV settings tested in this section must be the one used in **Section G, BEAM QUALITY**. In the event that the accuracy is off to a large extent, this should prevent an error message based on calculating HVL on the indicated kVp rather than the actual value. After testing, enter the **MEASURED** kV value from the meter reading at **Item 1 of SECTION G, BEAM QUALITY**.

I.1 Set the x-ray timer at 100 milliseconds, and utilize an mA setting high enough to allow the kV meter to operate. Make an exposure and enter both the indicated and measured kilovoltage at Items 1a and 1b. If only mAs is selectable, utilize the smallest mAs that will allow the meter to operate.

I.2 Maintain the same kVp and timer setting. Make an exposure and enter the indicated and measured kilovoltage at Items 2a and 2b.

I.3 Select two (2) other kV stations, if possible, and adequate mAs to allow the kV meter to operate and make an exposure for each setting. Enter the indicated and measured kV values at Items 3a - 4b. **Be sure to select the kV used during HVL.**

I.4 Different kV meters measure different aspects of the kV waveform. Enter the type of kV measurement performed: A(verage), P(eak), or E(ffective).

J. Recommended Exposure Factors and Exposure Data:

The exposure values recorded in Section C - Reproducibility are representative of the typical patient exposures. These exposures should be within the DENT range for the kVp and film type utilized by the facility. The DENT exposure ranges are listed at the end of these instructions.

If the exposures are outside the DENT ranges, some attempt should be made to correct the problems at the facility. This may include processor and/or QA problems, not just machine parameters.

Facilities using type "E" speed film may need to use the 10 mA station or lower to obtain reliable timer settings.

J.1 After corrections have been made, enter the new technique settings that have been made to the facility at Items 1 - 5, as appropriate.

J.2 Set up the radiation probe, test stand and tubehead as in Section B above. Make 2 exposures using the new technique settings and enter the measured exposures at Items 6 and 7. These values should be within the DENT ranges listed on the next page.

Acceptable X-Ray Exposures Ranges

"D" Speed Film			"E" Speed Film		
kVp	Lower Limit	Upper Limit	kVp	Lower Limit	Upper Limit
50	400 mR	550 mR	50	220 mR	280 mR
55	370 mR	520 mR	55	190 mR	250 mR
60	320 mR	475 mR	60	170 mR	220 mR
65	270 mR	415 mR	65	145 mR	190 mR
70	230 mR	360 mR	70	125 mR	165 mR
75	180 mR	305 mR	75	100 mR	130 mR
80	160 mR	260 mR	80	85 mR	115 mR
85	140 mR	230 mR	85	80 mR	105 mR
90	120 mR	210 mR	90	70 mR	95 mR
95	100 mR	195 mR	95	60 mR	85 mR
100	90 mR	180 mR	100	50 mR	70 mR

K. Comments and Observations:

This section is used to enter notes during the survey. This information **MAY** be printed on the final report using the computer program.

L. Dental Phantom Information:

The CDRH Dental Phantom can be used for a number of different tests on a dental radiographic unit. One of the most useful tests can be of image quality of the dental radiographs. This can be used to convince the dentist that using a combination of technique factors that produce an ESE within the recommended range will, in fact, result in an acceptable radiograph that contains all information of clinical interest.

SETUP FOR INTRA-ORAL UNIT PHANTOM DATA

Place the **NEXT CDRH dental phantom cradle** on some form of support (a tri-pod if available). The phantom cradle should be placed so that it is level and secure to avoid the possibility of damage due to a fall. If a tri-pod is utilized, it can be attached to the underside of the phantom cradle using the tripod mounting screw.

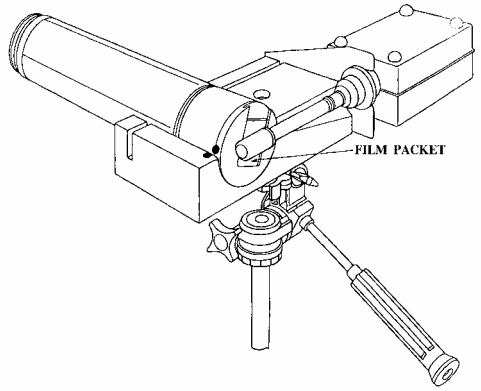

The phantom cradle should be placed at a height that enables easy positioning of the intra-oral tube so that the cone lies level and parallel to the phantom cradle. The probe holder should be **opposite** from the cone **(see diagram)**.

Insert one packet of the **facility's film** into the film holder which is a "U" shaped area located in the phantom. The film holder is in close proximity to the wire mesh components of the phantom. Make sure that the **tube side** or flat side of the film packet is facing down in the direction of the wire mesh (this is critical since there is lead foil on the opposite side of the dental film. If the film is positioned incorrectly, the film density will be too light).

After the film packet has been inserted, the phantom should be placed on the phantom cradle. The marker (dot) on the phantom should align with the marker (dot) on the phantom cradle **(see diagram, phantom setup** The MDH probe does not have to be used in this set up - just happened to be in the available picture.)

Move the phantom and cone so that they make contact with each other. The cone should be aligned with the phantom and phantom cradle. The cone should **not** be angled.

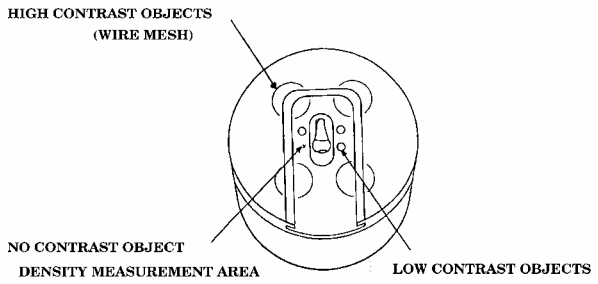

Utilizing the **facility's standard technique settings for the facility's film** make an exposure. This should be the same technique used in Section B - Initial Setup of the Dental Procedure.

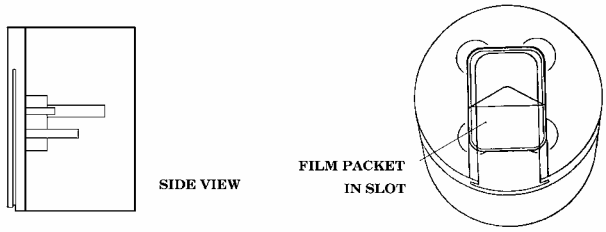

Remove the film packet from the phantom and develop it in the facility's processor following the standard

procedure for the type of processor present.

INTRA-ORAL UNIT PHANTOM IMAGE EVALUATION

Develop the film which utilized the **facility's standard technique settings**. Measure the optical density. The optical density should be measured at the area adjacent to the **lone** contrast object. The optical density should be between 1.4 and 1.8 odu. Record in the Comments section of the Dental Form, page 3.

Number of Wire Meshes Seen On Facility's Film

Count the number of different gauge wire meshes that you can see and record this number in the box below. You should **not** count a wire mesh pattern if you can not see the "tiny" spaces which result from the mesh running vertically and horizontally. You should be able to see at least three of the four.

# Mesh	(Lines per Inch)	(Lines per mm)
1	100	3.9
2	120	4.9
3	150	5.9
4	200	7.9

If the radiograph does not meet the above criteria, or the ESE is out of the DENT range, take additional radiographs with this setup to produce an acceptable radiograph. Allow the dentist to view the series of radiographs to see the differences in technique factors.

5. CALCULATION PROCEDURES

C. Reproducibility

C1. Refer to data items C1a, C2a, C3a, and C4a of the survey sheets. (If ten exposures were made, include data Items C5a-C10a also.)

a. Using the following equation, with n=4 or n=10, as appropriate, calculate the average exposure, _1 :

$$\overline{E}_1 = \frac{(\sum_{i=1}^{n} x_i)}{n}$$

where x_i represents the data items referred to above.

b. Calculate the percent coefficient of variation, C_1, as follows:

$$C_1 = \frac{100}{\overline{E}_1}\left[\sum_{i=1}^{n}\frac{(x_i - \overline{E}_1)^2}{(n-1)}\right]^{\frac{1}{2}}$$

where n=4 or n=10, depending upon the number of exposures.

C2. Refer to data items B2, B3, B4 and B5 of the survey form. Compute the mAs, if data item B5 is blank, by multiplying B2*B3 or B2*(B4/60).

C3. Calculate the average exposure per mAs, $\underline{X}_1$, as follows:

$$\overline{X}_1 = \frac{\overline{E}_1}{mAs}$$

D. mA Linearity

D1. Refer to data items D2 through D5, calculating the average exposure, $_2$, as follows:

$$\overline{E}_2 = \frac{\left(\sum_{i=1}^{n} x_i\right)}{n}$$

where the x_i are the data items referred to above.

D2. Calculate the percent coefficient of variation, C_2, as in step C1b:

$$C_2 = \frac{100}{\overline{E}_2}\left[\sum_{i=1}^{n}\frac{(x_i - \overline{E}_2)^2}{(n-1)}\right]^{\frac{1}{2}}$$

where the x_i are the data referred to above.

D3. Refer to data items D1 and B3 or B4 of the survey form. Compute the mAs by multiplying D1*B3 or D1*(B4/60).

D4. Calculate the average exposure per mAs for the new mA station used, $\underline{X}_2$, as follows:

$$\overline{X}_2 = \frac{\overline{E}_2}{mAs}$$

D5. Calculate the percent Coefficient of Linearity, L, as follows:

$$L = \left[\frac{|\overline{X}_1 - \overline{X}_2|}{(\overline{X}_1 + \overline{X}_2)} \right] * 100$$

where $\underline{X}_1$ and $\underline{X}_2$ are the values calculated in steps C3 and D4 above.

E. Timer Linearity

E1. Exposures taken within this section should be ranked according to increasing timer station size.

E2. Each timer station is compared to that immediately preceding it on the ranked list according to the following formula for linearity:

$$L = \left[\frac{|X_n - X_{n-1}|}{(X_n + X_{n-1})} \right] * 100$$

where X_n is the measured output (data Items E1b-E6b) divided by its respective mAs (data Items E1a-E6a times data Item E1).

F. mAs Linearity

F1. Exposures taken within this section should be ranked according to increasing mAs selection.

F2. Each mAs station is compared to that immediately preceding it on the ranked list according to the following formula for linearity:

$$L = \left[\frac{|X_n - X_{n-1}|}{(X_n + X_{n-1})} \right] * 100$$

where X_n is the measured output (data Items F1b-F6b) divided its respective mAs (data Items F1a-F6a).

G. Beam Quality

G1. Let data Items G2a-G6a be represented by a_i, and data Items G3b-G6b be represented by b_i, where 3 □ i □ 6 for the following equations:

$$A = \sum_{i=1}^{n} \log(a_i)$$

$$B = \sum_{i=1}^{n} b_i$$

$$Y = \sum_{i=1}^{n} b_i * \log(a_i)$$

$$Z = \sum_{i=1}^{n} (b_i)^2$$

G2. Then the linear regression to determine the "best fit" line for the observed data is calculated according to the following formula:

$$Y' = m * HVL_{obs} + c$$

where,

$$m = slope = \frac{Y - \frac{A * B}{n}}{Z - \frac{B^2}{n}}$$

$$c = y - intercept = \frac{A}{n} - \frac{\left[Y - \frac{A * B}{n}\right] * \frac{B}{n}}{\left[Z - \frac{B^2}{n}\right]}$$

HVL_{obs} = mm Al at the point Ý = log(½[data Item G2a])

G3. Correcting for the geometry and energy dependence using the MDH gives:

HVL_{actual} = (HVL_{obs} * 0.923) + 0.165

G4. Alternatively, the normalized exposures (data Items G2a-G7a divided by _1 above) vs. aluminum thickness can be graphed on semi-log paper and the observed HVL read off the linear scale. The Actual HVL is corrected as in step G3 above.

H. X-Ray Field Size and Shape/Minimum SSD

Calculate the minimum Source to Skin Distance (SSD_{MIN}) using the measured outside distance of the focal spot strip image, data Item H3, assuming standard geometry from the survey protocol:

$$SSD_{MIN} = \frac{136.65}{(H3 - 6.35)} - 7.66$$

I. kV Accuracy

The KV ACCURACY is expressed as a % difference between the indicated and measured kV values (K):

$$D = \frac{|K_{ind} - K_{meas}|}{K_{ind}} * 100$$

J. Recommended Exposure Factors

Average data Items J6 and J7 and report as an Entrance Skin Exposure value

TECHNIQUE/EXPOSURE EVALUATION (ESE)

USE and PERFORMANCE EVALUATION

Surveyor's Instructions

1. INTRODUCTION

The Technique/Exposure Evaluation Form was developed to provide data on the radiation exposure utilized by a facility to produce a diagnostic radiograph. Other important data, such as the film/screen combination chosen, the use of a grid, and workload is also gathered. Since the NEXT program is no longer available for implementation in federal facilities, the data collected by this form will provide comparable information.

2. GENERAL INSTRUCTIONS

Facility Name:

Enter the name of the facility as it appears on the IHS/DEH Facility Data System listing or other agency listing system.

Survey Date:

Enter in the date that this form was filled out at the facility. Use a MM-DD-YY format as indicated. For example, June 9, 1990 would be recorded as 06-09-90.

Room Number:

Enter in the room number for the x-ray unit being evaluated.

Surveyor ID:

IHS employees enter in their 3 digit EHRS number. Other users enter in their initials or other ID of the surveyor who completed this survey form.

Note: If any item on this survey form is not applicable, or is being skipped, draw a line through the data boxes for that item to indicate to the reviewers that it has been considered, not missed.

As used in this protocol, the term **INDICATED** means a value observed by the surveyor from a meter or dial that is a part of the system being surveyed; **MEASURED** means a value that is obtained from a physical measurement by the surveyor.

A. Projection Data

A.1a Enter in the radiographic facility identification number in the space at Item 1a. This number must be identical to the number recorded on the equipment performance evaluation form. For IHS facilities, this number is the unique Facility Data System (FDS) number for this x-ray unit.

A.1b Enter in the System ID number (CDRH #) at Item 1b. This number is optional for IHS facilities.

A.2 Using the code letters listed on the survey form, indicate the projection selected in the space at Item 2. If a radiographic unit is used for only one type of projection, e.g., a dedicated chest system, it is unnecessary to perform multiple projections.

A.3a Enter in the **AVERAGE WEEKLY** workload (number of films) for the **selected projection** at Item 3a. This value can be determined by the records maintained by the facility or by asking the operator if no records are available. If the operator is unable to furnish this information, leave this section blank.

A.3b Enter in the **TOTAL WEEKLY** workload (number of films) for **all projections** taken on this x-ray system at Item 3b. This number must be greater than the value recorded in Item 3a. If the operator is unable to furnish this information, leave this section blank.

A.4a Enter Y or N at Item 4a to indicate if the automatic exposure control system (phototiming) is usually used with the selected projection.

A.4b1 If the answer to Item 4a was Y-Yes, enter in the density control setting normally used for this projection at Item 4b1. The first box can be coded "+", "-", or left blank. The second box can be either numeric or a letter.

A.4b2 Enter in the detector configuration used for the projection at Item 4b2. Most AEC units utilize three detectors, and the choice of these detectors should be indicated according to the configuration codes listed on the survey form. If the unit is not one of the three detector types, code the configuration as "6-Other". If the detector configuration cannot be determined, code the box "X".

A.5 Enter in the technique factors used by the facility to make an exposure of an "average" patient with the body part thickness indicated for this projection at Items 5a - 5e. On typical phototimed systems, only the backup time can be selected. If that is the case, record the indicated kVp, the selected mA, and the backup timer setting.

Note: Determine if the facility uses any additional filtration in the tube housing assembly and how much for the projection in question. If any filtration was removed, or the dial setting was changed, during another test procedure, have the technician reset the filtration to the normal amount used by the facility.

A.6a Write down the manufacturer and type of film utilized by the facility for this projection. Using Appendix 4, enter in the appropriate film codes in the blocks at Item 6a.

A.6b Write down the manufacturer and type of screen utilized by the facility for this projection. Using Appendix 5, enter in the appropriate screen codes in the blocks at Item 6b.

A.7a Indicate the type of scatter suppression used. Use the code letters indicated on the survey form (G,A,N,U) and enter at Item 7a.

A.7b If a grid used, enter in its grid ratio at Item 7b. If a grid is not used or if it is not possible to obtain the grid ratio information, draw a line through the boxes.

Note: Do not attempt to remove a grid from the system. Obtain this information from a visual inspection of the system or by asking the facility personnel. In many cases, grids that are easily removed are very difficult to re-insert.

B. Set-Up and Exposure Measurements

Chest Exposures: Assemble the CDRH phantom. Place the phantom on a flat surface with its thin side toward the film and flush with the front plate of the film changer or wall unit. You may need to use tape to accomplish this if the supporting surface is uneven.

Note: The front plate is the surface against which the chest of the patient is positioned during the P/A chest examination.

Adjust the x-ray system, depending on the mode of operation, as follows:

Manual Technique: Adjust the x-ray unit and phantom until the phantom is centered right-to-left horizontally over the film, and is placed vertically in the upper two-thirds of the x-ray unit light field. Remember that the phantom must be flush with the front plate of the chest unit.

AEC Technique: Adjust the x-ray unit and phantom until the phantom is centered right-to-left horizontally over the film and covers all of the phototiming detectors. Many units have an outline of the detectors on the face of the front plate or have them indicated on the light field. It is essential that the phantom covers the detectors and is flush with the front plate of the chest unit.

Other Phantoms: The Abdomen/Spine phantom should be positioned in a similar manner to that used with the chest phantom. A template is supplied with this phantom to assist you in collimating the beam to 10" by 10".

Please Note: Remove the template before placing the phantom into position. It is essential that the beam be collimated to 10" by 10."

Insert a loaded cassette in the film holder.

Position the MDH 6 cm^3 probe in the holder that is attached to the phantom. Set the MDH to PULSE EXPOSURE and MEASURE.

Note: Once the set-up is completed, do not move the system until all data is obtained.

Select the density setting and detector configuration that were recorded at Items A4a and a4b and select the technique factors for this projection that were recorded at Item A5a-A5e.

B.1 Measure the distance, to the nearest millimeter, from the x-ray source to the front plate of the film changer, the front of the cassette or the tabletop. Enter this distance at Item B1.

B.2 Measure the distance, to the nearest millimeter, from the x-ray source to the center of the radiation probe. Enter this distance at Item B2.

B.3 Enter P or M at Item B3 to indicate whether a P-Phototimed or M-Manual exposure mode was selected for this projection.

B.4 Enter Y or N at Item B4 to indicate if a CDRH phantom was used for this exposure.

Note: The CDRH phantoms should be used for all P/A Chest, P/A Abdomen or A/P Lumbo-Sacral Spine projections, whether or not a phototimer is used. If the facility routinely uses phototiming, ask the X-ray equipment operator to also set up a manual technique for these projections. The phantoms should not be used for any other projections, except as a probe holder. **Do not** use film when doing the Lateral Skull and Wrist projections.

B.5 Make an exposure and enter in the measured exposure and the measured time from the MDH at Items B5a and B5b.

Note: If the phototimer was selected and the measured time equals the backup timer setting, there is a problem with the system.

B.6 Remove the cassette and process the film. Using the densitometer supplied in the QA Survey Kit, measure the density on the appropriate section of the phantom image.

Chest projection: measure the density in a central area of the phantom image with a uniform density. Do not measure where there is an image of the probe or assembly hardware.

Abdomen projection: measure the density in either of the outside (darker) areas of the abdomen/spine phantom image. Do not measure the density in the image of the probe.

Spine projection: measure the density in the central (lighter) area of the abdomen/spine phantom image. Do not measure over the image of the phantom assembly hardware.

This density value should be in the range of 1.00 to 1.60 Optical Density Units (OD).

Enter this value at Item B6.

C. Film Processing Data

It is important that the film processor be monitored whenever the Entrance Skin Exposure measurements are taken. This is necessary to properly interpret the data if it outside the recommended ranges. For example, if the optical density of a chest film is 2.58 OD, it is possible that there is nothing wrong with the techniques as set, but that the processor is too warm. Without STEP data, it is difficult to determine the cause.

If the survey is conducted over a continuous time period (e.g., two days) and the processor is not serviced during that period, perform a STEP test on the processor during the survey. The results will be valid for ALL ESEs done during the survey period.

If the survey is performed over a non-continuous period (e.g., Room 1 ESEs in January and the mobile ESEs during June), then a STEP should be done for the processor for each time you are in the facility.

Follow the procedures for processor QA in the CDRH USE CONTROL manual. Enter the data in the appropriate places of SECTION C on the ESE Data Form.

3. CALCULATION PROCEDURES

The Entrance Skin Exposure (ESE) is a function of the distance of the patient to the source of the x-rays. The calculations are set for the CDRH standard phantom thickness in determining the source-to-skin distance. The thickness (T) is determined by the projection used (data Item A2); i.e., skull = 15 cm; wrist = 5 cm; P/A chest, P/A abdomen and L/S spine all = 23 cm.

The measured distances used in the calculation of the ESE for a projection are data Item B1 (D_1) and data Item B2 (D_2).

The exposure (E) is data Item B5a.

The calculation uses the inverse square law as:

$$ESE = \frac{D_2^{\,2} * E}{(D_1 - T)^2} * 100$$

The calculation is repeated for each projection and AEC mode.

Field Calculations:

$$ESE = \frac{(Data\ Item\ B2)^2 * \ (Data\ Item\ B5a)}{(Data\ Item\ Item\ B1 - Thickness)^2}$$

Fill in blanks with Data Items from the ESE data collection form:

$$ESE = \frac{(\qquad cm)^2 * \ (\qquad mR)}{(\qquad cm - \qquad cm)^2} = \qquad mR$$

UNDERTABLE X-RAY SOURCE FLUOROSCOPIC AND SPOT-FILM SYSTEMS

(Test Procedure UFA - Form FD2786)

This section is a revision of the CDRH Routine Compliance Testing Manual. This test is included for use until an approved IHS protocol for fluoroscopic systems is developed.

1.0 General Guidance

1.1 This procedure is applicable to stationary fluoroscopic systems having an undertable x-ray source and manual, automatic, or both automatic and manual adjustment of technique factors during fluoroscopy. **It is not applicable to C-arm or abovetable x-ray source systems** . The system need not have a spot-film device.

1.2 When a step or entire section of the procedure is skipped, enter an asterisk in the first data Item of that section, explain in Remarks why this was skipped, and continue on with the next appropriate section.

Note: If multiple indicators are provided for a single parameter (e.g., kVp, etc.) but the indicators do not agree with one another, choose the indicator 1) associated with a certified component and 2) most commonly use. Note in the Remarks that these indicators do not agree and estimate the amount of discrepancy.

2.0 Pretest Checklist

2.1 Turn on the main power to the x-ray system.

2.2 Connect the 6-cm^3 ionization chamber to the electrometer. Set the mode selector switch to EXPOSURE RATE and the function selector switch to MEASURE. Allow the electronics 10 seconds to stabilize. After 10 seconds, the exposure rate should be less than 4mR/min. If it is not, the instrument may be defective and you should contact CDRH for guidance.

2.3 If not already completed, complete the general information test record. Record the five digits that appear preprinted on the general information test record and a unique letter designator in the appropriate block on each page of the undertable fluoroscopic test record. Thus, test records for a combination abovetable

radiographic/undertable fluoroscopic system would be identified as follows: "GI12345" - general information; "AR12345A" - abovetable radiographic; and "UF12345B" - undertable fluoroscopic.

2.4 Verify that the assembler's reports, FD 2579's, are correctly prepared. If they are not, write in the correct information above the incorrect information.

2.5 Record the code for the appropriate "Test Procedure" at Item 1.

2.6 From the appropriate assembler report, record the beam-limiting device manufacturer and model name at Items 2 and 3, respectively. In some cases, the BLD will be considered an integral part of the table and not be separately certified and identified. For these cases, record the table manufacturer and model code from its identification label.

2.7 Indicate the certification status of each component making up the system at Item 4.

2.8 Position movable grids and compression cones out of the path of the beam.

2.9 Move the Bucky tray to one end of the table away from the fluoroscopic source and lock into position. Check to see that the Bucky slot cover is in position.

2.10 If possible, retract the spot-film carriage out of the path of the beam.

2.11 If the system uses a television monitor, turn it on and allow time for stabilization.

Important!

Before making an exposure for sections 3.0 and 4.0, put on a leaded apron and gloves, raise the table scatter shield, and position any leaded curtains on the imaging assembly to provide maximum protection to yourself.

3.0 Interlock Test

Test Setup

(a) Position copper attenuators totaling 0.10 inches in thickness on the table **near** the fluoroscopic x-ray field.

(b) Set the GM meter with the sensitive area at the front of the case on top of the copper attenuators.

Note: The directionality of this instrument is severe, and therefore, the end "+" mark should be aligned as carefully as possible with the source or suspected source of radiation.

Test Procedure

3.1 Place the imaging support assembly in the park position (away from the table).

3.2 If the system provides for "Manual" and "Automatic" adjustment of fluoroscopic technique factors, select a low kVp and mA control settings and check interlock operation in both mode.

3.3 Before making an exposure, position the exposure foot-switch as far away from the table as possible.

3.4 Momentarily depress the exposure foot-switch. Observe the GM meter and the x-ray control for any indication of x-ray production.

3.5 Return the imaging support assembly to the ready position (over the x-ray source) and disconnect the image intensifier from the support assembly. Move the image intensifier out of the way. Repeat steps 3.2, 3.3, and 3.4.

Important!

If no one is available to disconnect the reconnect the image intensifier, skip over this section of the test. Do not perform the disconnection and reconnection yourself.

3.6 Record at Item 5 whether the system prevents x-ray production when the primary protective barrier is not in position to intercept the beam. If the answer is "No," explain in Remarks the circumstances under which x-ray production was possible; e.g., image intensifier disconnected and fluoroscopic technique factor control in "Manual".

4.0 Surveyor Protection Test

Note: The GM meter is a sensitive instrument, but is extremely energy dependent. It is intended as a qualitative indication. Any quantitative measurements of radiation exposure should be made using the 100-cm^2 ionization chamber. The purpose of this test is to determine the radiation exposure level at any area occupied by the surveyor during fluoroscopic exposures.

Test Setup (see figure on test record)

(a) Place the slide assembly, **grid side up**, on the table such as to intercept the fluoroscopic x-ray field. Place paper beneath the slide assembly, if needed, to protect the table surface.

(b) On top of the slide assembly, center copper attenuators totaling 0.10 inches in thickness.

Test Procedure

4.1 Position the imaging assembly from its park position to a position over the table. Raise the table scatter shield and position the leaded curtains to provide maximum scatter protection.

4.2 Raise the imaging assembly to the maximum SID and lock in position.

4.3 Fully open the beam-limiting device.

4.4 If available, set the mode of fluoroscopic technique factor control to "Manual" and the control settings to approximately 90 kVp and 2 mA.

4.5 Make several short exposures and with the GM meter, scan the primary barrier, leaded curtains, and table scatter shield. Note the areas of greatest GM meter deflection, including unprotected areas where scatter radiation levels are high. These areas should be avoided during further testing. (Refer to page GM-1 for instructions on the proper use of the GM meter.)

Note: If the system is image-intensified but there is no spot-film device or similar primary protective barrier other than the image intensifier housing, use fluorescent strips, direct-print paper, or some other means to confirm that the direct x-ray beam does not extend beyond any edge of the primary barrier.

4.6 If the GM meter indication is greater than 15 for the Model 251B instrument and 150 for the TBM-1 instrument, make follow-up measurements with the 100-cm^2 ion chamber on the MDH1015. If the follow up measurements exceed 50 mR/hr, stop all further testing. Record at Item 6 that the system is hazardous and explain in the REMARKS.

4.7 Observe the visible area of the image receptor while moving the imaging assembly parallel with the tabletop length, to assure that the x-ray source and image receptor are ganged. **If they are not and x-ray production is possible, discontinue all further testing**. Record at Item 6 that the system is hazardous and explain in the Remarks.

5.0 Tracking Test

Select the "1-on-1" mode, if possible.

5.1 Lower the fluoroscopic imaging assembly until the bottom of the assembly is about 30 centimeters from the tabletop.

5.2 Adjust the beam-limiting device such that each blade can be seen on the visible area of the image detector.

5.3 Depress the exposure switch. Raise the fluoroscopic imaging assembly through the entire range of SID's to assure that the system is tracking properly. Because of nonlinearities in the system, the collimator blades may wiggle slightly as the SID changes. However, if the system is tracking properly, the collimator blades will adjust to maintain a relatively fixed areas of illumination on the TV monitor as the SID's increased. If the system is not tracking properly, the amount by which the collimator blades must be adjusted before they become visible again is an indication of the misalignment at that SID.

Note: Describe in detail in the Remarks any abnormalities, such as the collimator blades moving off the edge of the image receptor.

5.4 Does the beam-limiting device track the image receptor properly? Record at Item 7. If the answer is "No", a fluoroscopic x-ray field/image receptor alignment test must be performed at the maximum SID.

6.0 X-Ray Field/Image Receptor Alignment

Test Setup (see figure on test records)

(a) Set the test stand without the spacer assembly beneath the imaging assembly.

(b) Insert the slide assembly, **grid side down**, into slot 5 of the test stand.

(c) On top of the slide assembly, center copper attenuators totaling 0.10 inches in thickness.

(d) Set the electrometer on the tabletop, with the rubber feet in contact with the table. Position the 6-cm^3 ion chamber in the center of the test stand bottom.

Test Procedure

6.1 Center the test stand under the imaging assembly according to the following instructions:

(a) Adjust technique factors to obtain a good quality image.

(b) Using the image of the slide assembly from the image intensifier, center the test stand beneath the imaging assembly by moving the fluoroscopic imaging assembly.

(c) Once centered, lock the horizontal movement of the fluoroscopic imaging assembly.

6.2 Set the x-ray monitor mode selector to EXPOSURE and the function selector to MEASURE.

6.3 (a) If the answer to the tracking question (data Item 7) is "No", set the imaging assembly to the maximum SID and lock the vertical movement. **Check to assure the beam-limiting device is fully open** and continue on with the next step in the test procedure.

(b) If the answer to the tracking question (data Item 7) is "Yes", skip to step 6.9.

6.4 Insert a plastic cassette containing a sheet of direct-print paper into the slide assembly.

6.5 Make an exposure and read the dimensions of the grid image.

Note: See lines 1/4, 2/1, 3/2, and 4/3 of Figure 1. For future references, observe that 1/4 passes between the slide assembly quadrant numbers 1 and 4, and so forth and each small division of the grid represents 0.1 inches.

Record the values in order from 1/4 to 4/3 at Items 8 through 11.

6.6 If the accumulated exposure is 2.5 R or greater, the direct-print should provide a satisfactory image. Make any additional exposure required to obtain a total of 2.5 R.

6.7 Remove the cassette from the slide assembly and develop the direct-print paper by exposure to fluorescent light. (Refer to page LINA-1 for proper development technique).

6.8 Measure to the **nearest millimeter** from the center of the grid to the edge of the image along each of the four lines 1/4 through 4/3.

Note: Again observe that 1/4 passes between the slide assembly quadrant numbers 1 and 4, and so forth.

6.9 Bring the imaging assembly into firm contact with the top of the test stand and lock into position. Open the beam-limiting device fully.

6.10 If testing a dual-field type image intensifier (e.g., one having 6" and 9" diameter modes of operation), select the mode of greatest magnification (e.g., the 6" mode). However, do not use any mode (e.g., a 4" mode) that will not allow the dimensions of the grid to be read.

Note: This is the only test that uses a magnification mode.

6.11 Insert a plastic cassette containing a sheet of direct-print paper into the slide assembly.

6.12 Make an exposure and read the dimensions of the grid image.

Note: See lines 1/4, 2/1, 3/2, and 4/3 of Figure 1. For future references, observe that 1/4 passes between the slide assembly quadrant numbers 1 and 4, etc. and each small division of the grid represents 0.1 inches.

Record the values in order from 1/4 to 4/3 at Items 16 through 19.

6.13 If the accumulated exposure is 2.5 R or greater, the direct-print paper should provide a satisfactory image. Make any additional exposure required to obtain a total of 2.5 R.

6.14 Remove the cassette from the slide assembly and develop the direct-print paper by exposure to fluorescent light. (Refer to page LINA-1 for proper development technique).

6.15 Measure to the **nearest millimeter** from the center of the grid to the edge of the image along each of the four lines 1/4 through 4/3.

Note: Again observe that 1/4 passes between the slide assembly quadrant numbers 1 and 4, etc.

Record the values in order from 1/4 to 4/3 at Items 20 through 23.

6.16 Are the tube potential and current continuously indicated during an exposure? This indication need not be provided at the operator's position. Record at Item 24.

6.17 Is there a warning label as prescribed in 21 CFR 1020.30(j) present on the control panel containing the main power switch?

Record at Item 25.

FLUOROSCOPIC TECHNIQUE FACTOR CONTROL TYPE

Are the fluoroscopic technique factors manually controlled, automatically controlled, or are both manual and automatic fluoroscopic technique factor controls provided? Record at Item 26.

Note: The answer to this question may be postponed until performing the operational checks described in sections 7.0 and 8.0.

7.0 Entrance Exposure Rating - Automatic

Test Setup (see figure on test record)

Change the test setup to:

(a) Move the slide assembly, **grid side down**, into slot 2 of the test stand.

(b) On top of the slide assembly, center copper attenuators totaling 0.10 inches in thickness.

(c) Insert the focal-spot assembly, **brass side up**, into slot 7. **Recenter the test stand.**

(d) Insert a plastic cassette containing a sheet of direct print paper into the slide assembly.

Test Procedure

7.1 Center a 1/8 inch thick lead sheet on top of the copper attenuators.

7.2 Set the fluoroscopic technique factor control mode to "Automatic" and the "Automatic Brightness Control" for maximum brightness. The "Automatic" mode may be checked by observing the exposure rate with and without the 1/8 inch lead sheet in the x-ray beam. If the system is in "Automatic" mode and the kVp and mA are not at their maximum value, the exposure rate should be appreciably higher with the lead in the beam.

7.3 Set the x-ray monitor mode selector to EXPOSURE RATE and the function selector to MEASURE. While making an exposure, it is usually necessary to vary the kVp and/or mA settings to obtain the maximum electrometer reading.

Note: Some problems have been reported for image-intensified systems with automatic exposure control, but with only direct mirror viewing (i.e., no television monitor). Room light can leak into the system and cause the automatic exposure control to suppress the kVp and mA; therefore, for these systems, turn the room lights as far down as possible when making this exposure measurement. Then turn the room lights up to read the electrometer.

Record the indicated tube potential and tube current at Items 27 and 28, respectively and the exposure rate at Item 29.

7.4 If means to activate a high-level control are provided, make an exposure. Note the exposure rate. While making the exposure, activate the high level control. Record the high level exposure rate in Remarks.

Note: Since on some systems the hookup for a high-level control is user option, means to activate a high-level control (e.g., button or double detent foot switch)

may be present but not hooked up. **Therefore, to determine the presence or absence of such a control, a radiation exposure rate check must be made**.

7.5 If the high-level exposure rate exceeds the low-level rate, record "Y" in Item 30. Otherwise, record "N" in Item 30.

7.6 Is a continuous audible signal provided upon activation of the high-level control. Record at Item 31. If a high-level control is not present, record "X" at Item 31.

8.0 Entrance Exposure Rate - Manual

Test Setup

Change the test setup to:

(a) Remove the 1/8 inch lead sheet used in Section 7.0

Test Procedure

8.1 Set the fluoroscopic technique factor control mode to "Manual". The "Manual" mode may be checked by inserting additional copper in the beam. Observe the exposure rate with and without the additional copper. If the system is in "Manual" mode, exposure rates in each case should be about the same. Remove additional copper after this check.

8.2 Many systems do not yield their maximum entrance exposure rate at maximum tube potential or tube current; therefore, check the exposure rate at various kVp and mA settings to establish worst-case technique factors. Set the x-ray monitor mode selector to EXPOSURE RATE. While making an exposure, vary the kVp and mA settings to maximize the electrometer reading. Record the worst-case kVp and mA at Items 32 and 33, respectively, and the exposure rate at Item 34.

Note: Since the MDH 1015F provides an indication of the average exposure rate every 1.2 seconds, the kV and mA settings must be varied slowly to maximize the electrometer reading.

8.3 If means to activate a high-level control are provided, make an exposure. Note the exposure rate. While making the exposure, activate the high-level control. Record the high-level exposure rate in the Remarks.

Note: Since on some systems the hookup of a high-level control is a user option, means to activate a high-level control (e.g., button or double detent foot switch) may be present but not hooked up. **Therefore, to determine the presence or absence of such a control, a radiation exposure rate check must be made**.

8.4 If the high-level exposure rate exceeds the low-level rate, record "Y" in Item 35. Otherwise, record "N" in Item 35.

8.5 Is there a continuous audible signal upon activation of the high level control? Record at Item 36.

9.0 Primary Barrier Transmission

9.1 (a) If the system has a manual fluoroscopic technique factor control mode, proceed with the next step.

(b) If the system has **only** an automatic fluoroscopic technique control factor mode, go directly to step 9.3.

MANUAL

9.2 Set the fluoroscopic technique factor control mode to "Manual" and the kVp at its maximum value and the mA at about 1 mA. Skip to step 9.4.

AUTO - ONLY

9.3 (a) If the system has only automatic fluoroscopic technique factor control and the kVp can not be held constant, place 0.1 inches of copper on top of the slide assembly. Skip to 9.5.

(b) If the system has only automatic fluoroscopic technique factor control and the kVp can be held constant, select the maximum kVp.

9.4 Place a thickness of copper appropriate for the selected kVp on top of the slide assembly.

KVp	Cu (inches)
99 or less	0.08
100 to 125	0.10
greater than 125	0.12

9.5 With the x-ray monitor mode selector at EXPOSURE RATE, make an exposure **without** activating any available high-level controls. Record the observed kVp and mA at Items 37 and 38.

9.6 Using the 6-cm^3 ion chamber and the electrometer on the tabletop, record the exposure rate at Item 39.

9.7 Make an exposure and with the GM meter scan the surface of the primary barrier, particularly those positions most likely to have insufficient attenuating material (e.g., around bolts, joints, and so forth) and note the position of the highest reading.

Note: In some cases, especially when there is no spot-film device, the primary protective barrier is the image intensifier housing. In these cases, measurement of barrier transmission will be significantly biased by radiation scattered from the copper attenuators; therefore, during the GM meter scan and subsequent measurement with the 100-cm^2 chamber, position a lead sheet parallel to the tabletop at the plane of the image intensifier input phosphor and positioned to shield the chamber from all radiation except that transmitted through the primary barrier.

9.8 Switch "OFF" the MDH and secure the 100-cm^2 chamber assembly at the position of highest reading on the GM meter. Set the x-ray monitor mode selector to EXPOSURE and the function selector to MEASURE.

9.9 Make an exposure of 25 to 30 seconds duration. (A 20-mR/hr transmission rate will result in a 0.15-mR exposure in 30 seconds). Any useful reading should be at least 0.05 mR or greater. It may be necessary to make an exposure of greater than 30 seconds; however, do not exceed 1 minute. Check the tube rating charts to be sure that the rated limits are not exceeded. Measure the exposure time with the stopwatch.

9.10 Record the exposure and exposure time at Items 40 and 41, respectively.

10.0 Source-Skin Distance Determination

10.1 An image on direct print paper for minimum SSD determination is obtained at the same time as testing performed in sections 7.0 through 9.0 of the test procedure. A satisfactory image will be obtained on the direct print paper only if the total tabletop exposure during the referenced tests is 5.0 R or greater. Make an

estimate of the total exposure obtained during the referenced tests before developing the image.

10.2 Remove the cassette from the slide assembly and develop the direct print paper by exposure to fluorescent light.

10.3 Measure the minimum separation of the outside edges of the focal-spot strip images to the nearest millimeter and record at Item 42.

11.0 Beam Quality

Test Setup (see figure on test record)

Change the test setup to:

(a) Remove the slide assembly and focal-spot assembly from the test stand.

(b) Insert the 6-cm^3 ion chamber through the top mounting hole of the test stand and secure with the retaining ring.

(c) Center copper attenuators totaling 0.10 inches in thickness on top of the test stand.

(d) Insert the beam defining assembly, **lead side up**, into slot 7 of the test stand.

(e) Place 4.5 mm of aluminum on the beam defining assembly in slot 7.

Test Procedure

11.1 (a) If the system has only an automatic fluoroscopic technique factor control mode, go directly to step 11.5.

(b) If the system has a manual fluoroscopic technique factor control mode, select this mode.

MANUAL MODE

11.2 Set the tube potential to a **commonly** used value above 70 kVp and the tube current to at least 2.0 mA. Record the kVp at Item 43.

11.3 Five exposures are required for the beam quality determination. With the x-ray monitor mode selector in PULSE EXPOSURE, reset the x-ray monitor by switching the function selector to HOLD and back to MEASURE. The display should indicated -0.00. Make an exposure at the selected kVp. Record the exposure reading at Item 44. Switch the function selector to PULSE DURATION and record the time reading at Item 45.

Note: If a time measurement has not been obtained or appears erroneous, the exposure rate may be too low to trigger the MDH instrument. For this situation, the mA and/or kVP must be increased. **If kVp is changed, the kVp recorded at Item 43 must also be changed**.

11.4 Place totals of 3.5, 2.5, 1.5, and 0.0 millimeters on top of the beam-defining assembly. For each total, make an exposure as described in step 11.3 while **RESETTING THE X-RAY MONITOR EACH TIME**. Record the exposure and time at Items 46 through 53, respectively. Skip to step 11.7.

AUTOMATIC MODE ONLY

11.5 Five exposures are required for the beam quality determination. With the x-ray monitor mode selector in PULSE EXPOSURE, reset the x-ray monitor by switching the function selector to HOLD and back to MEASURE. The display should indicate -0.00. Make an exposure at the selected kVp. Record the exposure reading at Item 44. Switch the function selector to PULSE DURATION and record the time reading at Item 45.

Note: If a time measurement has not been obtained or appears erroneous, the exposure rate may be too low to trigger the MDH instrument. For this situation,

the mA and/or kVp must be increased. **If kVp is changed, the kVp recorded at Item 43 must also be changed**.

11.6 Move aluminum from the bottom of the test stand to slot 1 of the test stand such that totals of 3.5, 2.5, 1.5, and 0.0 millimeters of aluminum are left on the top of the beam-defining assembly. For each total of aluminum, make an exposure as described in 11.5 while **RESETTING THE X-RAY MONITOR EACH TIME**. Record the exposure and time at Items 46 through 53, respectively.

11.7 Set the cumulative timer to a very short time interval, only a few seconds if possible, and make an exposure of duration greater than the preset time interval. At the end of the preset interval does either a continuous audible signal indicate the end of the interval and/or is x-ray production terminated? Record at Item 54.

12.0 Spot Film-Reproducibility

Test Step (see figure on test record)

Change the test setup to:

(a) Remove the beam-limiting device.

(b) Insert the slide assembly, **grid side down**, into slot 2.

(c) Center copper attenuators totaling 0.10 inches on top of the slide assembly or the test stand.

(d) Insert a plastic cassette containing a sheet of direct-print paper into the slide assembly.

Test Procedure

12.1 Is the spot-film exposure timer a manually set timer (or mAs selector) or phototimer? Are both types of timers provided? Record at Item 55.

12.2 If available, select the spot-film phototimed mode.

12.3 Open the beam-limiting device **fully**. Do not further adjust the beam-limiting device. The device must automatically adjust to the selected portion of the spot film from this setting.

12.4 Set the x-ray monitor mode selector to PULSE EXPOSURE, the function selector to MEASURE, and the Pulse-Fraction Threshold to 0.5 for three phase equipment and 0.2 for single phase equipment. Record at Item 56.

12.5 Set the peak tube potential to a value commonly use for spot-film radiography as long as the value exceeds 70 kVp. Record at Item 57.

12.6 (a) If testing in the phototimed mode, leave any of Items 58 through 60 blank which are not preindicated, and skip steps 12.6(b) and 12.6(c).

(b) If independently selectable, choose values of tube current and exposure time, and record at Items 58 and 59. Leave Item 60 blank.

(c) If only the mAs is selectable, choose a value commonly used and record at Item 60. Leave Items 58 and 59 blank.

12.7 Insert an empty cassette into the spot-film device.

12.8 Make sure that the spot-film cassette is in position for an exposure and select a four-on-one format.

Note: On some systems, election of a four-on-one format results in the compression cone automatically moving into position. Thus, raise the imaging assembly before selecting the format such that the cone will clear the top of the test stand. If the cone comes into position, the imaging assembly's vertical movement should be locked with the cone just clearing the top of the test stand.

12.9 Record the dimensions of the selected spot-film format size at Items 61 and 62.

12.10 Measure the distance from the tabletop to the spot-film plane. Record at Item 65.

12.11 With the x-ray monitor mode selector at PULSE EXPOSURE, reset the x-ray monitor by switching the function selector to HOLD and then back to MEASURE. The display should indicate -0.00. Make an exposure at the selected tube current. DO NOT record the resultant reading.

Important!

If testing is in the phototimed mode, make a test exposure. If the exposure time recorded by the x-ray monitor is less than 100 milliseconds, then reduce the tube potential to increase the exposure item

above this minimum value and repeat the test exposure. **Correct Item 57 if necessary**.

12.12 Without changing technique factors or the x-ray monitor settings, make an additional exposure. The reading will now have no minus sign present. Record this reading of exposure at Item 66. Switch the function selector to PULSE DURATION nd record this time reading at Item 67. Switch the function selector back to PULSE EXPOSURE.

12.13 Make three additional exposures, with the exposure readings being recorded at Items 68, 70, and 72 and the time readings at Items 69, 71, and 73. If any two exposure readings differ by more than 10 percent of `the largest value, make six additional exposures. Record the additional exposure and time readings at Items 74 through 85 respectively. All variable controls for technique factors shall be adjusted to alternate setting and reset to the test setting after each measurement.

Note: The varying of technique factors to alternate settings and then back to the test setting is **only applicable to equipment manufactured after September 5, 1978**.

12.14 Sum the exposures from steps 12.12 and 12.13. If the sum is 1.3 R or greater, then the direct-print paper should provide a satisfactory image. Make any additional exposures required to obtain a total of 1.3 R.

12.15 Are the spot-film technique factors that are either fixed or selectable, indicated prior to the exposure (fixed technique factors may be indicated by a label)? Record at Item 86.

12.16 Did the exposures terminate after one of the following: A preset time interval, a preset mAs, or a preset radiation exposure. Record at Item 87.

Note: The intent of this question is to identify conditions that pose an imminent hazard; e.g., a system which upon activation of exposures occur or termination of exposure occurs only upon release of the exposure switch.

13.0 Spot Film X-Ray Field/Image Receptor Size Comparison

13.1 Exposure to the direct print paper for this test measurement is obtained during the spot film reproducibility test.

Note: A satisfactory image will be obtained on the direct print paper only if the total exposure at the ion chamber location during the referenced test is 1.3 R or greater.

13.2 Remove the cassette from the slide assembly and develop the direct-print paper by exposure to fluorescent light. (Refer to page LINA-1 for proper development technique).

13.3 Measure the dimensions of the spot-film x-ray field size on the direct-print paper. Record at Items 63 and 64, respectively.

14.0 CALCULATION TECHNIQUES

(Test Procedure UFA - Form FD2786)

A. Minimum Source to Skin Distance

1. Refer to data Item 42 of the Field Test Record. The minimum Source to Skin Distance (min SSD) is calculated as follows:

min SSD = [(34.34 * 6.35)/(data Item 42-6.35)]-1.61 cm.

Record the min SSD at Result 1.

B. Fluoroscopic X-ray Field/Image Receptor Alignment

1. Refer to data Items 8 through 15 of the Field Test Record. Calculate the misalignment between the x-ray field and the visible dimension of the image receptor as follows:

   Misalignment 1/4 = (data Item 12 - (data Item 8 * 2.54)) cm.
   Misalignment 2/1 = (data Item 13 - (data Item 9 * 2.54)) cm.
   Misalignment 3/2 = (data Item 14 - (data Item 10 * 2.54)) cm.
   Misalignment 4/3 = (data Item 15 - (data Item 11 * 2.54)) cm.

   Record the results at Results 2 through 5. Note that the misalignments must be equal to or greater than zero, since the x-ray field cannot be smaller than the visible area. Therefore, small negative misalignments should be taken as zero misalignment.

2. Refer to Result 1, min SSD. Calculate the source to image distance (SID) as follows:

   SID = (min SSD + 18.41) cm.

   Record at Result 6.

3. Calculate the following misalignments:

   a. (1/4 + 3/2) misalignment=misalignment 1/4 + misalignment 3/2.

   Record at Result 7.

   b. Percent (1/4 + 3/2) misalignment = (Result 7) * 100/SID
   Record at Result 8.

   c. (2/1 + 4/3) misalignment=misalignment 2/1 + misalignment 4/3.

      Record at Result 9.

   d. Percent (2/1 + 4/3) misalignment = (Result 9) * 100/SID

      Record at Result 10.

   e. Total misalignment = Result 7 + Result 9

      Record at Result 11.

   f. Percent total misalignment=(Result 7 + Result 9) * 100/SID

      Record at Result 12.

4. Repeat the calculations of steps 1 through 3 for data Items 16 through 23 and record at Results 13 through 23.

C. Fluoroscopic Entrance Exposure Rate

1. <u>Automatic Mode</u>

   Refer to data Item 29. Record the EER at Result 24.

2. Manual Mode

Refer to data Item 34. Record the EER at Result 25.

3. The applicable EER limit(s) can be determined from one of the following tables:

Single Fluoroscopic Technique Factor Control Mode Equipment Manf. Before 5/19/95

Equipment Mode	Without High Level Control (HLC)	With HLC
Automatic	10 R/min	5 R/min
Manual	5 R/min	5 R/min

Dual Fluoroscopic Technique Factor Control Mode Equipment Manf. Before 5/19/95

Equipment Mode	Without HLC	Manual W/HLC	Automatic W/HLC	Both Modes w/HLC
Automatic	10 R/min	10 R/min	5 R/min	5 R/min
Manual	10 R/min	5 R/min	10 R/min	5 R/min

EER without activating HLC

Units Manufactured after 5/19/95
Manual, Automatic or Both - 10 mR/min max. If manual >5mR.min, unit must have Automatic mode. **[Units equipped with HLC and AERC shall not exceed 20 mR/min-21 CFR §1020.32 (e)(ii)]**.

4. First determine from data Item 26 on the Field Test Record whether the system is a dual or single mode. Then refer to the proper table and using data Items 29, 30, 34 and 35 on the Field Test Record select the applicable EER limit(s).

D. Primary Barrier Transmission

1. Refer to data Item 39. Record at Result 26.

2. Refer to data Items 40 and 41 on the Field Test Record. Calculate the primary barrier transmission (PBT) as follows:

PBT = (((data Item 40/data Item 41) * 3600)/Result 26)

Record PBT at Result 27.

Note: This test is done in automatic mode only if the response to data Item 26 on the Field Test Record is "A-automatic only".

E. Beam Quality

1. Refer to data Items 44, 46, 48, 50, and 52 on the Field Test Record. Divide each exposure reading by its corresponding exposure time (data Items 45, 47, 49, 51, and 53) to yield the exposure rate in each case. Record the exposure rates, R_4 through R_0, at Results 28-32.

2. Divide each exposure rate, R_4 through R_1, by R_0, the exposure rate for zero filtration. Record the resultant quotients, N_4 through N_1, at Results 33-36.

3. On semilog paper, plot the four normalized exposures along the logarithmic scale with the corresponding thickness of aluminum attenuators along the linear axis. Draw a smooth curve fit to the points and determine the observed half-value layer (HVL) as that thickness of added aluminum which would yield a normalized exposure of 0.50. Record the observed HVL and the kVp at Result 37.

4. To determine the actual HVL, corrections for geometry effects and instrument energy dependence must be made.

   a. Actual HVL = $(1.247 * HVL_{obs}) - 0.432$

   This equation does not represent a universal correction to the observed HVL. This equation is only applicable to observed HVL's of the limits specified in the X-ray Performance Standard. For extremely large observed HVL's, this equation underestimates the actual HVL. The intent of this equation is to enable accurate compliance determinations for x-ray beams with marginal observed HVL's.

   b. Record the value of the actual HVL and the kVp at Result 38.

F. Reproducibility

1. Refer to data Items 66, 68, 70, and 72 on the Field Test Record. Calculate the average exposure, $\overline{E}$, as follows:

$$\overline{E} = \frac{\left(\sum_{i=1}^{n} x_i\right)}{n}$$

where x_i represents the data items referred to above. Record at Result 39. **Note:** If ten measurements have been made during the test, data Items 66, 68, 70, 72, 74, 76, 78, 80, 82, and 84 would be used in the calculation and n=10 in the equation.

2. Calculate the coefficient of variation, C, as follows:

$$C = \frac{100}{\overline{E}} \left[\sum_{i=1}^{n} \frac{(x_i - \overline{E})^2}{(n-1)} \right]^{\frac{1}{2}}$$

where the x_i 's are data items 66, 68, 70 and 72 and _ is the average exposure. Record C at Result 40.

Note: If ten measurements have been made during the test, data Items 66, 68, 70, 72, 74, 76, 78, 80, 82, and 84 would be used in the calculation and n=10 in the equation.

G. X-Ray Field/Spot Film Size Comparison

1. Refer to Result 1 (min SSD). Calculate the distance from the focal spot to the slide assembly, SID', as follows:

   SID' = (min SSD + 35.95) cm.

   Record the SID' at Result 41.

2. Refer to Result 1 (min SSD) and data Item 65 on the Field Test Record. Calculate the distance from the focal spot to the spot film plane, SID", as follows"

   SID" = (min SSD + data Item 65) cm.

   Record SID " at Result 42.

3. Along table comparison:

   a. Refer to data Item 63 on the Field Test Record. Calculate the x-ray field dimension along table at the spot film plane (CAL) as follows:

      CAL = ((SID" * data item 63)/SID') cm.

      Record CAL at Result 43.

b. Refer to data Item 61 on the Field Test Record. If the selected spot-film dimension along table is recorded in inches, multiply item 61 by 2.54 to convert to centimeters. Record the selected spot-film dimension along table at Result 44.

c. Calculate the along table difference as follows:

Along table difference = (CAL - Result 44) cm.

Record at Result 45.

d. Calculate the percent along table difference as follows:

% Along table difference = (Result 45 * 100)/SID"

Record at Result 46.

4. Across table comparison:

a. Refer to data Item 64 on the Field Test Record. Calculate the x-ray field dimension across table at the spot film plane (CAC) as follows:

CAC = ((SID" * data item 64)/SID') cm.

Record CAC at Result 47.

b. Refer to data Item 62 on the Field Test Record. If the selected spot-film dimension across table is recorded in inches, multiply Item 62 by 2.54 to convert to centimeters. Record the selected spot-film dimension across table at Result 48.

c. Calculate the across table difference as follows:

Across table difference = (CAC - Result 48) cm.

Record at Result 49.

d. Calculate the percent across table difference as follows:

% Across table difference = (Result 49 * 100)/SID"

Record at Result 50.

5. Sum the along and across table difference as follows:

   a. Refer to Results 45 and 49. Sum the absolute value of each Result and record the sum at Result 51.

   b. Refer to Results 46 and 50. Sum the absolute value of each Result and record the sum at Result 52.

15.0 RESULTS RECORD

(Test Procedure UFA - Form FD2786)

A. Minimum Source to Skin Distance

1. Minimum SSD = _____cm.

B. Fluoroscopic X-ray Field/Image Receptor Alignment

2. Misalignment 1/4 = _____cm.
3. Misalignment 2/1 = _____cm.
4. Misalignment 3/2 = _____cm.
5. Misalignment 4/3 = _____cm.
6. SID = _____cm.
7. (1/4 + 3/2) Misalignment = _____cm.
8. Percent (1/4 + 3/2) Misalignment = _____%.
9. (2/1 + 4/3) Misalignment = _____cm.
10. Percent (2/1 + 4/3) Misalignment = _____%.

11. Total Misalignment = _____cm.

12. Percent Total Misalignment = _____%.

13. Misalignment 1/4 = _____cm.

14. Misalignment 2/1 = _____cm.

15. Misalignment 3/2 = _____cm.

16. Misalignment 4/3 = _____cm.

17. SID = _____cm.

18. (1/4 + 3/2) Misalignment = _____cm.

19. Percent (1/4 + 3/2) Misalignment = _____%.

20. (2/1 + 4/3) Misalignment = _____cm.

21. Percent (2/1 + 4/3) Misalignment = _____%.

22. Total Misalignment = _____cm.

23. Percent Total Misalignment = _____%.

C. Fluoroscopic Entrance Exposure Rate

Automatic Mode

24. Entrance Exposure Rate = _____R/min.

Manual Mode

25. Entrance Exposure Rate = _____R/min.

D. Primary Barrier Transmission

26. Entrance Exposure Rate = _____R/min.

27. Primary Barrier Transmission = _____(mR/hr)(R/min)

E. Beam Quality

Exposure Rate

28. R_4 = _____mR/sec at 4.5 mm Al.

29. R_3 = _____mR/sec at 3.5 mm Al.

30. R_2 = _____mR/sec at 2.5 mm Al.

31. R_1 = _____mR/sec at 1.5 mm Al.

32. R_0 = _____mR/sec at 0.0 mm Al.

Normalized Exposure Rate

33. N_4 = _____at 4.5 mm Al.

34. N_3 = _____at 3.5 mm Al.

35. N_2 = _____at 2.5 mm Al.

36. N_1 = _____N_0 = 1.0 at 0.0 mm Al.

37. HVL_{obs} = _____mm Al at _____kVp.

38. Actual HVL = _____mm Al at _____kVp.

F. Reproducibility

39. Average Exposure, _ = _____mR.

40. Coefficient of Variation, C = _____.

G. X-Ray Field/Spot Film Size Comparison

41. Distance from Focal Spot to Slide Assembly, SID' = _____cm.

42. Distance from Focal Spot to Spot film plane, SID" = _____cm.

Along Table Comparison

43. X-ray Field Dimension Along Table at Spot Film Plane = _____cm.

44. Selected Spot Film Dimension Along Table = _____cm.

45. Across Table Difference = _____cm.

46. % Across Table Difference = _____%.

Across Table Comparison

47. X-ray Field Dimension Across Table at Spot Film Plane = _____cm.

48. Selected Spot Film Dimension Across Table = _____cm.

49. Across Table Difference = _____cm.

50. % Across Table Difference = _____%.

Sum Along + Across Table Differences

51. Along + Across Table Difference = _____cm.

52. % Along + Across Table Difference = _____ %.

DARKROOM FOG ASSESSMENTS

Standard Fog Test Protocol

1. Load a cassette (preferably 8" x 10") with the fastest film routinely processed in the darkroom.

2. Position the cassette on the x-ray table or other flat surface at a target-to film distance of 40 inches (100 cm).

3. Place an aluminum stepwedge in the center of the cassette. Align the long dimension of the stepwedge with the long axis of the cassette.

4. Collimate the light field to the edges of the stepwedge.

5. Set the technique factors to 70 kVp and 5 mAs and make an exposure.

6. In the darkroom, remove the film from the cassette and quickly position the film on the work area.

7. The film should be positioned in an area of the darkroom, usually on a workbench, where the patient films are routinely handled and has the highest probability of safelight exposure. If there is another area in the darkroom that could pose a problem, (such as near the film processor's feed tray) that area should also be evaluated.

8. Rapidly cover one-half of the film, bisecting the latent image of the stepwedge lengthwise.

9. Expose the uncovered half of the film to normal safelight conditions for two minutes. Make sure that you are not shielding the film from potential fog sources such as indicator lights or other safelights. Also make sure that you are not inadvertently exposing the film to the stopwatch display lights.

10. After two minutes have elapsed, process the film.

Evaluating the Film

Visually inspect the processed film. The human eye is very sensitive and can observe density differences of 0.01 OD.

If there is no visible density difference from one half of the image to the other, then there is no fogging problem.

If one half of the film shows an increased density, the amount of this increase must be determined. Using a densitometer, measure the density of the stepwedge step closest to 1.20 optical density units; once on the fogged side, and once on the side that was covered. The difference in density is the fog level for that step. Although the difference will vary for each step on the wedge, the maximum density difference should be recorded for the step closest to 1.20.

Fog levels should be less than 0.10 density units for general purpose films and 0.05 density units for mammographic films. Levels in excess of this value can usually be reduced with minimal effort (adjusting the safelight or replacing the filter).

If the fog levels are greater than 0.10 density units, the FOG test should be repeated with the safelights off. This will give the surveyor additional information on the actual cause of the problem. If the fog levels disappear, then the problem was due to the safelights. If the fog levels remain the same, the problem is due to a light leak into the darkroom. If the fog levels are reduced but still significant, a combination of problems may exist.

Dental Fog Test Protocol

The following procedure is to be used to sensitize film for determining darkroom fog levels. A darkroom fog test tool has been provided for this measurement. **This procedure would generally be used for facilities where a PeriPro® is the only developer available. If a developer is present that is capable of processing an 8" x 10" film (e.g., A/T2000), use the standard fog measurement protocol.**

A 1.0 optical density of one of the fog test tool steps is needed in order to evaluate fog.

Take the fog test tool and invert it, a depression lies underneath the steps of the test tool. Place a packet of the **facility's film** in this depression making sure that the tube side or flat side of the film packet is in contact with the test tool. Take the test tool and turn it back over. The steps of the test tool should be facing upright toward the x-ray tube **(see diagram, intra-oral fog test tool)**. Bring the cone from the intra-oral unit down so that it makes contact with the test tool. The cone should **cover** the steps of the test tool.

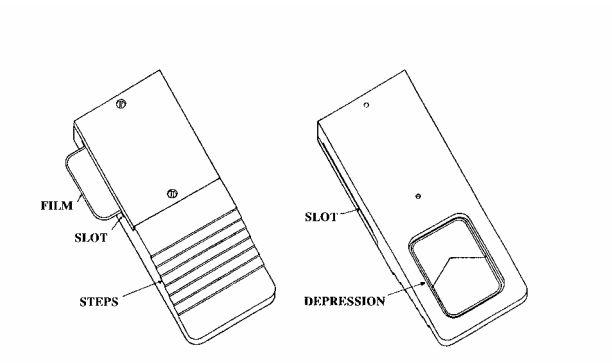

Make an exposure using the **facility's standard technique**. Remove the film from the fog test tool, mark the film and place it in a shielded area.

The manner in which fog levels are measured will depend on how the facility processes their film. If the facility has a darkroom, follow the procedures below. If the facility only utilizes a **daylight** automatic processor see the next section **Daylight Systems Fog Determination** for instructions.

Darkroom Fog Measurement

In the darkroom, unwrap the previously exposed film from the packaging and insert the film into the test tool. The long side of the film should be inserted into the slot located on the left or right hand side of the test tool. The slots are located in the flat part of the test tool and not the step portion. Be sure that you are approximately bisecting the latent image **(see diagram , intra-oral fog test tool)**.

Position the film and test tool in an area of the darkroom, usually on the workbench, closest to a safelight. This should represent, in your opinion, an area where film is routinely handled and has the highest probability of safelight exposure.

Expose the uncovered half of the film to normal safelight conditions for **two minutes**. Make sure that you are not accidentally shielding the films from other potential fog sources such as light leaks or digital light sources.

After two minutes have elapsed, quickly remove the film from the stepwedge, and feed them into the processor.

Using a watch with a second hand determine the film transport time through the processor. This time is measured from the time the trailing edge of the film enters the processor until the time that the film exits from the processor. Compare the transport time to the processor manufacturer's specifications.

Daylight Systems Fog Measurement

Place the intra-oral fog test tool in the work area or load-box of the unit. If the work area or load-box is equipped with a safelight lens or window, make sure that it is in the <u>open</u> position.

Note

If the facility indicates that they generally use the daylight automatic processing unit with the safelight lens or window in the closed position you will have to do the test twice, once in the open position and once in the closed position.

Place the film packet, the fog test tool and your hands into the work area and remove the previously exposed film from its packaging. Insert the film into the test tool. The long side of the film should be inserted into the slot located on the left or right hand side of the test tool. The slots are located in the flat part of the test tool and not the step portion. Be sure that you are approximately bisecting the latent image **(see diagram , intra-oral fog test tool)**.

Expose the uncovered half of the films to normal safelight conditions for **two minutes**.

After two minutes have elapsed, quickly remove the films from the stepwedge, and feed them into the processor.

Using a watch with a second hand determine the film transport time through the

processor. This time is measured from the time the trailing edge of the film enters the processor until the time that the film exits from the processor. Compare the transport time to the processor manufacturer's specifications.

Fog Evaluation (Darkroom)

If a visible line appears down the center of the film, then you have a fogging problem. Using the densitometer, measure the densities of both the left and right hand sides of the film at various steps. Record the **greatest** density difference. Fog levels with a difference of less than 0.10 density units between unshielded and shielded film, should be considered satisfactory for normal film handling times. (The 0.10 value may be considered too high by some sources. Fog levels in excess of 0.10 can usually be reduced with minimal effort.

Fogging can either be attributed to improper bulb wattage, close safelight positioning, too many safelights, wrong safelight filter for the film processed, aged safelights, damaged safelights, or any combination of these factors.

Fog Evaluation (Daylight Systems)

If a visible line appears down the center of the film, then you have a fogging problem. Using the densitometer, measure the densities of both the left and right hand sides of the film at various steps. Record the **greatest** density difference. Fog levels with a difference of less than 0.10 density units between unshielded and shielded film, should be considered satisfactory for normal film handling times.

If applicable repeat this for evaluating those facilities that keep the safelight window or filter **closed** when processing their films. If fog levels are greater than 0.10 density units, the safelight lens may not be properly matched to the film. "E" speed intraoral and panoramic films generally require a red lens rather than an amber lens used with "D" speed intraoral film.

Measurement Using Facilities Cephalometric or Panographic Film

The following procedure may be used to measure the darkroom fog level.

Load a cassette with a sheet of the facility's film.

Position the tube so that it has a source to image distance of **40 inches**. If it is possible, you may want to orient the tube so that it is facing down towards the floor. This will make it easier to continue with this section.

Place an aluminum stepwedge on the center of the cassette with the long side of the wedge

parallel with the long side of the cassette.

If available, adjust light field\collimators to the approximate size of the stepwedge.

Expose the cassette using approximately **70 kVp** and **5 mAs** to get a 1.0 density reading of one of the steps.

This is a base line technique; you may need to use more or less depending on the unit and the source to film distance.

In the darkroom, remove the film from the cassette and quickly position the film on the work area.

The film should be positioned in an area of the darkroom, usually on a workbench, where the patient films are routinely handled and has the highest probability of safelight exposure. If there is another area in the darkroom that could pose a problem, (such as near the film processor's feed tray) that area should also be evaluated.

Rapidly cover one-half of the film, bisecting the latent image of the stepwedge lengthwise.

Expose the uncovered half of the film to normal safelight conditions for two minutes. Make sure that you are not shielding the film from potential fog sources such as indicator lights or other safelights. Also make sure that you are not inadvertently exposing the film to the stopwatch display lights.

After two minutes have elapsed, process the film.

Note

The "darkroom" steps may have to be completed in the confined work area or load box for a daylight automatic processing unit. You may have to be creative when unloading the cassette and placing it into the fog folder. The top flap has a tendency to raise, so make sure that you use some method to keep it down and in contact with the film.

PEAK KILOVOLTAGE DETERMINATION

RADIOGRAPHIC SYSTEMS

(Test Procedure KVA - Use Form FD 3068)

This section is a reprint of the August 1, 1982, revision of the CDRH Routine Compliance Testing Manual. This test is included for use as an alternative procedure for determining peak kVp if your kVp meter is not functioning or as a check against the meter.

1.0 GENERAL GUIDANCE

1.1 This kVp test procedure is applicable for single and three phase, stationary and mobile radiographic, medical and dental x-ray equipment with a tungsten target. It is **not** applicable to capacitor discharge or fluoroscopic x-ray equipment.

1.2 The kVp test procedure is intended to be performed in conjunction with an Abovetable Radiographic (ARA), Mobile Radiographic (MRA), or Dental Radiographic (DRA) Field Test.

1.3 This test is only valid for reproducible systems. If it is suspected that the system under test has a reproducibility noncompliance, this test should not be performed.

1.4 Record the five digits, which appear preprinted on the general information test record, into the box in the upper right hand corner of the peak kilovoltage determination test record. Since this test if performed in conjunction with abovetable radiographic, dental radiographs, or mobile radiographic test, add the same letter designator as on the radiographic test record. Thus, test records for an abovetable radiographic/undertable fluoroscopic system would be identified as follows: "FI12345" - general information; "AR12345A" - radiographic; "KV12345A" peak kilovoltage; and "UF12345B" - fluoroscopic.

1.5 Connect the 6-cm^3 ionization chamber to the electrometer. Set the x-ray monitor mode selector to EXPOSURE RATE and the function selector to MEASURE. Allow the electronics 10 seconds to stabilize. After 10 seconds, the exposure rate reading should be less than 4 mR/min. If it is not, the instrument may be defective and CDRH should be contacted.

2.0 TEST SETUP

2.1 Attach the spacer assembly, positioned out of the beam, to the top of the test stand. Insert the beam-defining assembly, lead side up, into Slot 1 of the test stand.

2.2 (a) **Non-Dental Equipment**: Using the light localizer, center the test stand underneath the source assembly. Lower the source assembly until the face of the beam-limiting device is in firm contact with the spacer assembly. Lock the vertical movement. Turn on the light localizer and adjust the beam-lighting device such that the visually defined field is approximately 3" x 3" at the beam-defining assembly. The field should be centered on the 2" x 2" aperture of the beam-defining assembly.

(b) If the filtration present in the useful beam is adjustable, adjust to the value used during the radiographic field test.

2.3 **Dental Equipment**: Center the tube head above the beam-defining assembly so that the PID is pointing downward approximately 3 inches (height of spacer assembly) above the perpendicular to the beam-defining assembly. **For kVp setting of 70 kVp or lower, center a total of 3.5 mm of aluminum on the beam-defining assembly.** Tape the aluminum in place. For 90 kVp, fixed, omit the 3.5 mm of Al.

2.4 Insert the 6-mm^3 ion chamber through the top mounting hole of the test stand, and set the x-ray monitor mode selector to EXPOSURE and the function selector to HOLD.

3.0 COPPER TRANSMISSION DATA

3.1 Enter the code for the appropriate test procedure at Item 1.

3.2 **Non-Dental Equipment:** The kVp setting tested must be in the range of 71-90 kVp, and must be identical to the kVp used during beam quality measurements. Record at Item 2.

3.3 **Dental Equipment:** The kVp setting must be 70 kVp or lower when there is a range of kVp settings available. Record at Item 2.

3.4 (a) If independently selectable, choose values of tube current and exposure time that will result in at least 100 mR at the chamber position when there

is no copper absorber in the beam (3.5 mm of aluminum for dental equipment tested at 70 kVp or lower). To accomplish this condition, a test exposure as described in step 3.5 may be required. Record tube current and exposure time at Items 3 and 4.

3.4 (b) If only mAs is selectable, choose a value that will result in at least 100 mR at the chamber position when there is no copper absorber in the beam (3.5 mm of aluminum for dental equipment tested at 70 kVp or lower). To accomplish this condition, a test exposure as described in step 3.5 may be required. Record the mAs at item 5. Leave Items 3 and 4 blank.

3.5 The x-ray monitor display should read 0.00. If any other display is present, reset the instrument by switching the function selector to MEASURE and then back to HOLD. Make an exposure at the selected technique factors as soon as possible after switching the function selector to MEASURE. Since there is a slow upward drift in the exposure value in MEASURE, switch back to HOLD as soon as possible after exposure and record the exposure reading at Item 6.

3.6 Consult Table 1 (kVp versus copper absorber thickness) for the appropriate thicknesses of copper absorbers for completing the test. If the kVp setting selected for the test is not provided as part of Table 1, select the closest kVp in the table and the associated thicknesses of copper absorbers.

Table 1. Copper absorber thicknesses to be used at each data item number during the test procedure as a function of equipment type and kVp setting

		Copper Thicknesses (mm)			
	kVp	Item 7	Item 8	Item 9	Item 10
Dental	65	0.46	0.87	1.00	1.26
	70	0.46	0.87	1.00	1.54
Non-Dental	70	0.46	0.87	1.00	1.67
	80	0.54	1.00	1.33	2.13
	90	0.67	1.33	1.67	2.67

Note: Six copper sheets are included in the test kit, with approximate thicknesses in millimeters of 0.13 (2 each), 0.33, 0.54, 1.0, and 2.0 - the exact thickness of each sheet is stamped on the sheet. Using various combinations of these thicknesses, total copper thicknesses millimeters of approximately 0.13, 0.26, 0.33, 0.46, 0.54, 0.67, 0.80, 0.87, 1.0, 1.13, 1.26, 1.33, 1.46, 1.54, 1.67, 1.80, 1.87, 2.0, 2.13, 2.26, 2.33, and 2.46 can be achieved.

3.7 Center the copper absorber(s) corresponding to the smallest thickness (Item 7) on the beam-defining assembly.

3.8 Set the x-ray monitor back to MEASURE. As soon as possible after switching the function selector to MEASURE, make an exposure.

3.9 Switch back to HOLD as soon as possible after the exposure and record the exposure reading and selected copper thickness at Item 7.

Caution: Consult the system's duty cycle information and anode cooling curves to ensure that the following series of exposures will not exceed the manufacturer's anode heat loading specifications. If the proper cooling time between exposures cannot be determined, use the following guidance.

a. Rotating anode tubes: Wait 50 seconds after every accumulated 5,000 heat units loading of the anode.

b. Stationary anode tubes: Wait 30 seconds between exposures of less than 900 heat units and 50 seconds between exposures of 900 to 1,800 heat units.

3.10 Repeat the procedure of steps 3.8 and 3.9 for each thickness of copper absorber with the largest thickness last. Record the exposure reading and the selected copper thickness at Items 8, 9, and 10, respectively.

Note: For the last copper thickness, quickly check that the resultant exposure value is less than 2 percent of the 0.0-mm Cu exposure; i.e., data Item 6. If it is not, repeat the last exposure with sufficient copper to satisfy this condition.

4.0 CALCULATION PROCEDURES

4.1 Refer to Data Items 6, 7, 8, 9, and 10 on the Field Test Record. Divide each exposure by the exposure for 0.0 mm Cu; i.e., data Item 6 on the Field Test Record. The four resultant quotients are N_1 through N_4. Record at Results 1, 2, 3, 4.

4.2 On semilog paper, plot the four normalized exposures along the logarithmic scale with the corresponding thickness of copper absorbers along the linear axis. Draw a smooth curve fit to the points and determine the 8 and 2 percent transmission values as those thicknesses of copper that would yield normalized exposures of

0.08 and 0.02 respectively. Record the copper thickness values at Results 5 and 6.

4.3 Refer to Results 5 and 6. Calculate:

A = (Result 6-Result 5)

Record at Result 7.

4.4 Select the proper equation, based on the type of compliance test performed, and calculate the measured kVp:

a. Non-Dental Equipment:

Measured kVp = exp((11.6 - ln(1.386/A))/2.54)

b. Dental Equipment, 70 kVp or lower:

Measured kVp = exp((12.52 - ln(1.386/A))/2.77)

c. Dental Equipment, 90 kVp fixed:

Measured kVp = exp((10.424 - ln(1.386/A))/2.31)

Record the measured kVp at Result 8.

4.5 Select the proper equation, based on the type of compliance test performed, and calculate the actual kVp:

a. Non-Dental Equipment:

Actual kVp = (1.065 - (0.026 * HVL_{obs})) * Measured kVp

where, HVL_{obs} is the observed Half-Value Layer during the Non-Dental radiographic field test.

b. Dental Equipment, 70 kVp or lower:

Actual kVp = Measured kVp

c. Dental Equipment, 90 kVp fixed:

Actual kVp = (1.08 - (0.009 * HVL_{act})) * Measured kVp

where, HVL_{act} is the actual Half-Value Layer calculated from the Dental radiographic field test.

4.6 Refer to data Item 2 on the Field Test Record and record as Result 10. Calculate the percent deviation from the indicated kVp setting as follows:

% Deviation = 100*(Indicated kVp - Actual KVp)/Indicated kVp

Record at Result 11.

5.0 RESULTS RECORD

Normalized Exposures:

N_0 = 1.0

5.1 N_1 = _____

5.2 N_2 = _____

5.3 N_3 = _____

5.4 N_4 = _____

8% and 2% Transmission Copper Thicknesses

5.5 _____._____mm Cu @ 8%

5.6 _____._____mm Cu @ 2%

Difference in 8% and 2% Copper Thicknesses

5.7 A =_____._____ mm Cu

5.8 ___Measured kVp___ ___kVp

5.9 _____Actual kVp_____ ___kVp

5.10 Indicated kVp

5.11 Percent Deviation

___kVp ___%

Date: _____ Room: _____ Name (Signature): _____

X-Ray Equip Mfg.: _____ Model No.: _____ Serial No.: _____

X-Ray Tube Mfg.: _____ Model No.: _____ Serial No.: _____

Source to Tabletop Distance (check one): 22" (radiographic) _____ 18" (Fluoroscopic) _____ other (number) _____

Generator Time Setting: _____ Filtration (at 90 kVp): HVL _____mm Al Inferred total Al filtration _____ mm.

Selected MA Station	**Selected kV**				
	60	**80**	**100**	**120**	
	Displayed kV				
25					
50					
100					
200					
300					
400					
500					
600					
800					
1000					

SECTION III – IHS CERTFICATION PROGRAM

A. Introduction

The *Certified Radiation Protection Surveyor* (CRPS) credential is required to perform unassisted radiological health and safety surveys. Certification is achieved by completing formal training, sufficient radiological health and safety surveying experience with oversight review and approval by a CRPS, successful completion of a radiological health and safety survey before a qualified Food and Drug Administration (FDA) representative and successful final review by a CRPS. Upon completion of the certification process, a certification credential will be issued.

B. Certification Process

Completion of the following courses (or equivalent training as approved by the IHS Radiation Workgroup Subject Matter Expert):

1. CDRH/IHS X-Ray Surveyor's Course, Part I - "Fundamentals of Radiation Physics & Safety" (40 hrs. minimum).

2. IHS X-Ray Surveyor's Course, Part II - "Equipment Evaluation Procedures" (40 hrs. minimum, including a practicum in equipment operation).

3. CDRH/IHS X-Ray Surveyor's Course, Part III - "Improving Facility Image Quality and Reduced Patient Exposure" (40 hrs. minimum).

Once a candidate has successfully completed the three required courses, he/she must notify the IHS Radiation Workgroup Subject Matter Expert. The candidate can begin performing surveys of various types of x-ray machines with oversight review and approval by a CRPS. No later than 18 months from the notification date or when the candidate and a reviewing/approving CRPS feel that the candidate has attained an acceptable level of competence, the candidate may petition the IHS Radiation Workgroup Subject Matter Expert for a FDA competency review. The candidate must then demonstrate surveying techniques before a qualified FDA representative, prepare a written report of the survey findings and submit the report to the FDA representative for review and approval. Upon successful approval, the FDA representative will forward the report to the IHS Radiation Workgroup Subject Matter Expert for final review and approval or disapproval with recommendations. Upon successful review and approval by the IHS Radiation Workgroup Subject Matter Expert that the candidate has attained an acceptable level of competence, the IHS Radiation Workgroup Subject Matter Expert will recommend certification commensurate with the level of expertise. Based upon this recommendation, the CRPS credential will be issued through IHS headquarters, Environmental Health Services Branch.

A certificate will be signed and issued by the Chief EHSB, OEHE. The certificate affirms that the surveyor is IHS certified to evaluate diagnostic X-ray facilities. Although certificates may not state a date of expiration, re-certification is required within three years from the date of issuance.

C. Levels of Certifications

Three levels of certification are established to recognize the range of complexity possible in the various types of equipment and the need to establish professionals with the skills sufficient to evaluate those systems. Those completing the certification process may use the designation "Certified Radiation Protection Surveyor" (CRPS).

CRPS – I - Dental Systems Certification

Certification is restricted to dental x-ray system evaluations. The candidate must demonstrate familiarity with quality assurance evaluation procedures for a dental radiology program.

Certification Exception: No later than 18 months from the notification date or when the candidate and a reviewing/approving CRPS feel that the candidate has attained an acceptable level of competence, the candidate may petition the IHS Radiation Workgroup Subject Matter Expert for a CRPS competency review. The candidate must then demonstrate surveying techniques before a CRPS, prepare a written report of the survey findings and submit the report to the CRPS for review and approval. Upon successful approval, the CRPS will forward the report to the IHS Radiation Workgroup Subject Matter Expert for final review and approval or disapproval with recommendations. Upon successful review and approval by the IHS Radiation Workgroup Subject Matter Expert that the candidate has attained an acceptable level of competence, the IHS Radiation Workgroup Subject Matter Expert will recommend certification commensurate with the level of expertise. **Note: This exception is restricted to CRPS-I only.**

CRPS – II – General Purpose Systems Certification

Certification is restricted to dental x-ray systems, stationary above-table radiographic and mobile radiographic systems. The candidate must demonstrate familiarity with quality assurance evaluation procedures for a medical radiology department.

CRPS – III. - Advanced Systems Certification

Certification includes dental x-ray systems, stationary above-table radiographic, mobile radiographic systems and advanced systems such as stationary fluoroscopy systems, mobile fluoroscopy systems (i.e. C-Arm), and Computed Tomography (CT) systems. The candidate must demonstrate familiarity with quality assurance evaluation procedures for a medical radiology department.

D. Re-Certification

CRPS – I - Dental Systems Re-certification

Continuing Experience: A minimum of 15 dental system evaluations within a three-year period.

Continuing Education: Surveyors must obtain 6 contact hours every 3 years from the anniversary date of initial certification or re-certification. Qualifying contact hours include but are not limited to health physics, medical physics, diagnostic radiological imaging, radiological quality assurance and radiation safety.

CRPS – II – General Purpose Systems Re-certification

Continuing Experience: In addition to meeting Level I requirements, a minimum of 6 stationary above-table radiographic and mobile radiographic system evaluations within a three year period. Three of the 6 evaluations must be of a stationary above-table general purpose system.

Continuing Education: Surveyors must obtain 6 contact hours every 3 years from the anniversary date of initial certification or re-certification. Qualifying contact hours include but are not limited to health physics, medical physics, diagnostic radiological imaging, radiology quality assurance and radiation safety.

CRPS – III. - Advanced Systems Re-certification

Continuing Experience: In addition to meeting Level I and II requirements, a minimum of 3 fluoroscopy and other advanced system (head units, C-Arms or CT units) evaluations within a three year period. One of the 3 evaluations must be of a fluoroscopy system.

Continuing Education: Surveyors must obtain 15 CEUs every 3 years. Qualifying CEUs include but are not limited to health physics, medical physics, diagnostic radiological imaging, radiology quality assurance and radiation safety.

E. Continuing Education and Experience Documentation

Continuing education documentation must be submitted to the IHS Radiation Workgroup Subject Matter Expert. Continuing experience documentation must be authenticated by the Surveyor's supervisor and then submitted to the IHS Radiation Workgroup Subject Matter Expert. A re-certification document will be issued. Re-certification is required within three years from the date of document issuance.

F. Conflicts of Interest

Considering that the IHS Radiation Workgroup Subject Matter Expert is subject to certification and re-certification requirements, the IHS Radiation Workgroup Subject Matter Expert must have all required documentation authenticated by a different CRPS member of the IHS Radiation Workgroup. **Note: CRPS member must have a level of certification that is no less than the IHS Radiation Workgroup Subject Matter Expert's desired level of certification.**

GLOSSARY OF TERMS

Actual vs. Indicated Field Size: A measurement to assure manual settings of the beam limiting device corresponds to the actual field size. Proper operation of the beam limiting device limits the beam size to the intended area of clinical interest.

Beam Quality: A measurement to determine the half-value layer (HVL). HVL relates to the thickness of a specified material, usually aluminum, required to decrease the dosage rate of a beam of X-rays to one-half its initial value. The purpose of the filtration is to absorb the lower energy portion of the x-ray spectrum which would otherwise be absorbed by the patient without contributing to the diagnosis. HVL performance standards are expressed in millimeters of Aluminum.

Collimator: A device to restrict the size of the X-ray beam.

Entrance Skin Exposure: The amount of radiation delivered at the skin surface. It is generally the sum of the air dose at that point and backscatter.

Kilovolt (kV): 1000 volts.

Kilovolts Peak Potential (kVp): The crest value of the potential wave in kilovolts. This indicates the maximum energy level of the X-ray photon.

kV Accuracy: A comparison of measured kV versus that indicated on the machine selector control.

kV Compensation: A comparison of measured kV values at varying mA stations to assure consistency.

Milliampere (mA): One thousandth of an ampere. This indicates the rate of x-ray production.

Milliampere-second (mAs): The numerical product of the milliamperage and the time in seconds. With all other factors held constant, the film density is related to mAs and will not change as the mA and time are varied; as long as they are varied reciprocally and their product is unchanged.

mA Linearity: A comparison of X-ray exposure at adjacent mA settings to assure consistency. Performance standards for linearity are expressed using a statistical ratio (Coefficient of Linearity).

Phantom: A device that absorbs and scatters x-rays in approximately the same way as tissues of the body. It is used, instead of a human, while making measurements that include scattered radiation.

Positive Beam Limiting Device (PBL): A device that automatically adjusts the x-ray field to the size of the film cassette in the cassette holder. The PBL device automatically limits the beam size to the area of clinical interest.

Quality Assurance: The portion of the Radiation Protection Survey which monitors or audits film processing and its effects on radiation exposure.

Reproducibility: A measure of X-ray consistency for a given technique setting (kVp, mA and time). Performance standards are expressed using a statistical test (Coefficient of Variation).

Source-to-Image Distance (SID): The distance from the X-ray tube target (anode) to the X-ray film or other image receptor. The performance standards are expressed as a percentage of actual distance to the tube head distance setting.

Source-to-Skin Distance (SSD): The distance from the X-ray tube target (anode) to the skin of the patient where the X-ray beam enters the body. The performance standard requires a minimum distance be maintained depending upon machine parameters.

Timer Linearity: A comparison of the x-ray exposure at different machine timer settings to ensure consistency. Performance standards are expressed as a Coefficient of Linearity.

X-Rays: A form of the electromagnetic radiation spectrum possessing the speed of light and are resultant to the **extranuclear** interactions within atoms.

X-Ray Beam/Light Field Alignment: A comparison of the dimensions of the X-ray beam to the corresponding light field dimensions. This is an indication of whether the X-ray beam is limited to the area of clinical interest.

X-Ray Field\UTIR Centers Comparison: A measurement of the center of the X-ray beam as it corresponds to the film cassette holding device (Bucky). Centers misalignment adversely affects the diagnostic quality of the image.

APPENDICES